marathon®

General Purpose Motors

Model No: 284TSTFCA6001
Catalog No: GT1027

General Purpose Motor, 25 & 20 HP, 3 Ph, 60 & 50 Hz, 230/460 & 190/380 V, 3600 RPM, 284TS Frame, TEFC

©2026 Marathon, All Rights Reserved.

marathon®

Product Information Packet: Model No: 284TSTFCA6001, Catalog No: GT1027 General Purpose Motor, 25 & 20 HP, 3 Ph, 60 & 50 Hz, 230/460 & 190/380 V, 3600 RPM, 284TS Frame, TEFC

Nameplate Specifications

Phase	**3**	Output HP	**25 & 20 Hp**
Output KW	**18.7 & 14.9 kW**	Voltage	**230/460 & 190/380 V**
Speed	**3553 & 2960 r/min**	Synchronous RPM	**3600 & 3000 r/min**
Service Factor	**1.15 & 1.15**	Frame	**284TS**
Enclosure	**Totally Enclosed Fan Cooled**	Thermal Protection	**No Protection**
Efficiency	**91.7 & 91 %**	Ambient Temperature	**40 °C**
Frequency	**60 & 50 Hz**	Current	**57/28.5 & 55/27.4 A**
Power Factor	**89.5**	Duty	**Continuous**
Insulation Class	**F**	Design Code	**B**
KVA Code	**G**	Drive End Bearing Size	**6211**
Opp Drive End Bearing Size	**6211**	UL	**Recognized**
CSA	**Y**	CE	**Y**
IP Code	**43**	Number of Speeds	**1**

Technical Specifications

Electrical Type	**Squirrel Cage Inverter Rated**	Starting Method	**Wye Start Delta Run Or Inverter**
Poles	**2**	Rotation	**Reversible**
Resistance Main	**.321 O**	Mounting	**Rigid Base**
Motor Orientation	**Horizontal**	Drive End Bearing	**Ball**
Opp Drive End Bearing	**Ball**	Frame Material	**Cast Iron**
Shaft Type	**TS**	Overall Length	**28.82 in**
Shaft Diameter	**1 5/8 in**	Shaft Extension	**3.25 in**
Assembly/Box Mounting	**F1/F2 Capable**	Inverter Load	**Variable 10:1**

Drawings

Connection Drawing	**A-EE7308AA**	Outline Drawing	**SS620246-284TS**

This is an uncontrolled document once printed or downloaded and is subject to change without notice. Date Created: 16/10/2026

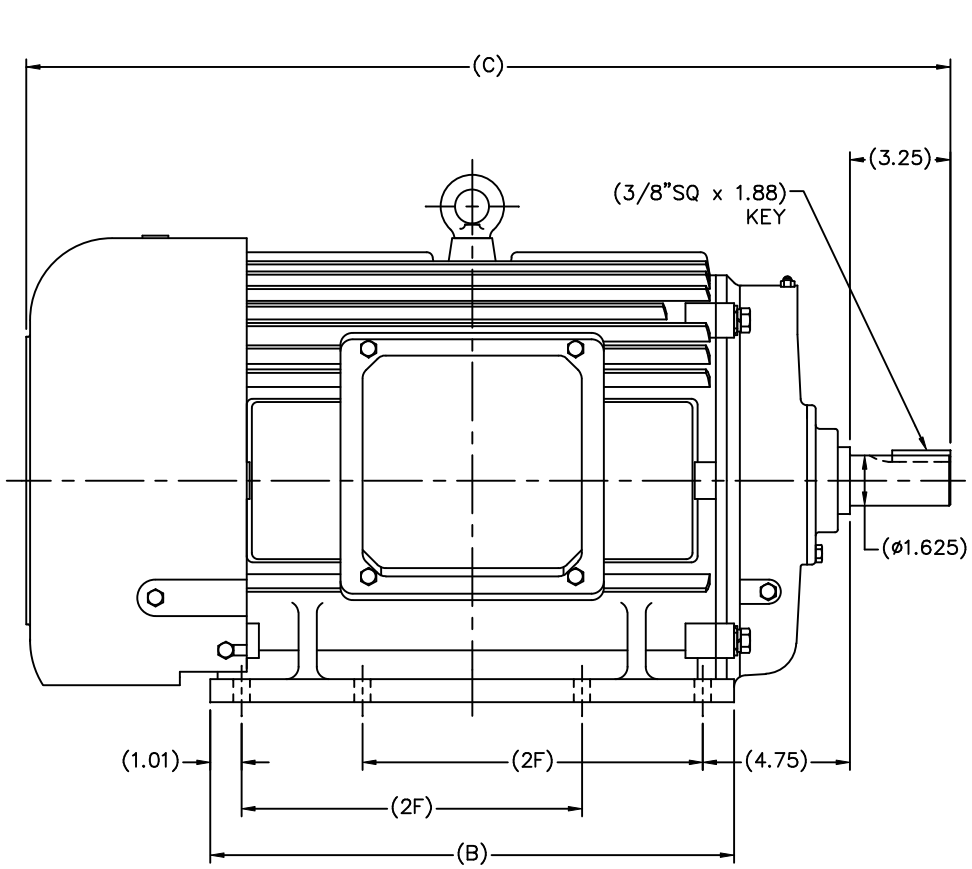

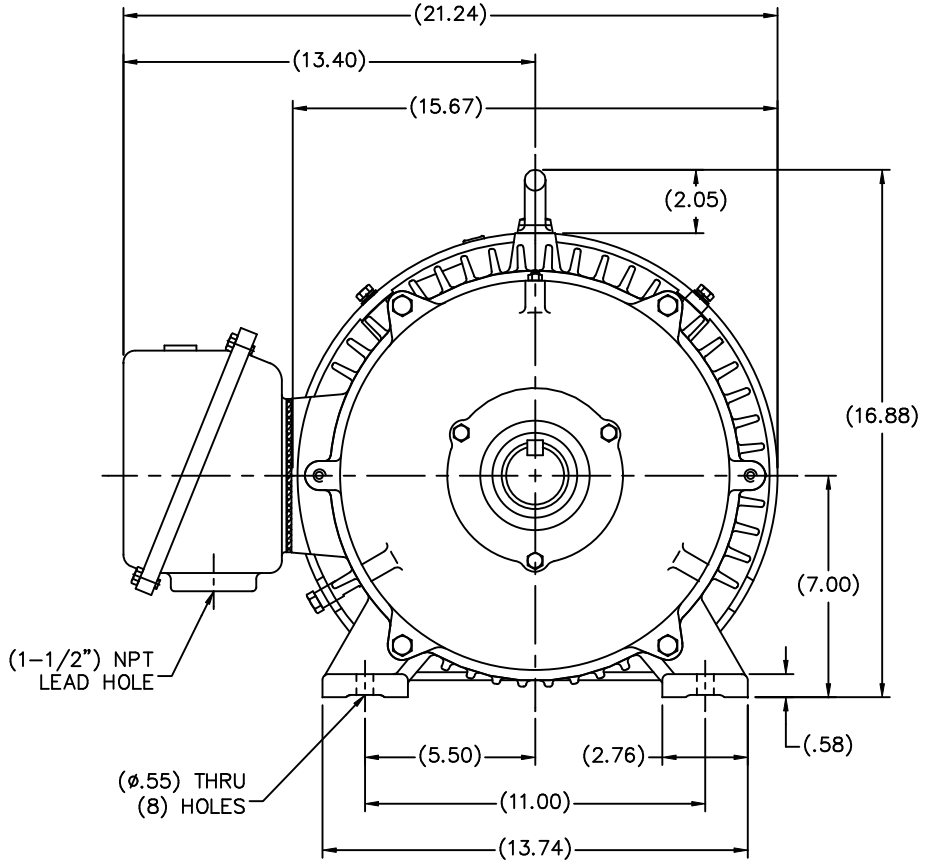

(MAY NOT BE DRAWN TO SCALE)

(DIMENSIONS IN TABLE ARE CONSIDERED REFFERENCE)

284TS	28.82	15.75	9.50
286TS	30.00	16.93	11.00
FRAME	C	B	2F

NO.	REVISION	BY & DATE	CHK

TOLERANCES UNLESS SPECIFIED

DEC.	INCHES
.X	±.1
.XX	±.03
.XXX	±.005
.XXXX	±.0005
ANG	±7'30"

MARATHON ELECTRIC

TITLE OUTLINE
280TS FR. – TEFC

MAT'L.

FINISH

CAD FILE SS620246

RFP 01–14–2010

DIST

DRAWN	MSG 01–12–2010
CHK	MJS 01–13–2010
APPD	SB 01–13–2010
SCALE	1=4
REF	
FMF	HUADA
PREV	

SIZE B | DRAWING NO. SS620246 | PAGE OF | REV.

THIS DRAWING IN DESIGN AND DETAIL IS OUR PROPERTY AND MUST NOT BE USED EXCEPT IN CONNECTION WITH OUR WORK ALL RIGHTS OF DESIGN AND INVENTION ARE RESERVED
THIS IS AN ELECTRONICALLY GENERATED DOCUMENT – DO NOT SCALE THIS PRINT

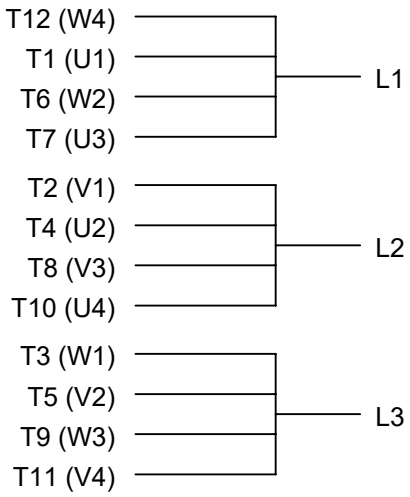

LOW VOLTAGE

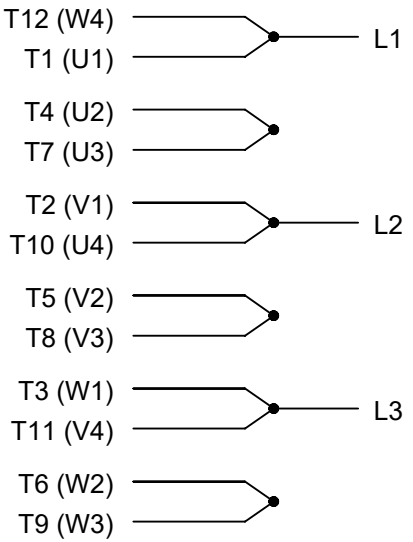

HIGH VOLTAGE

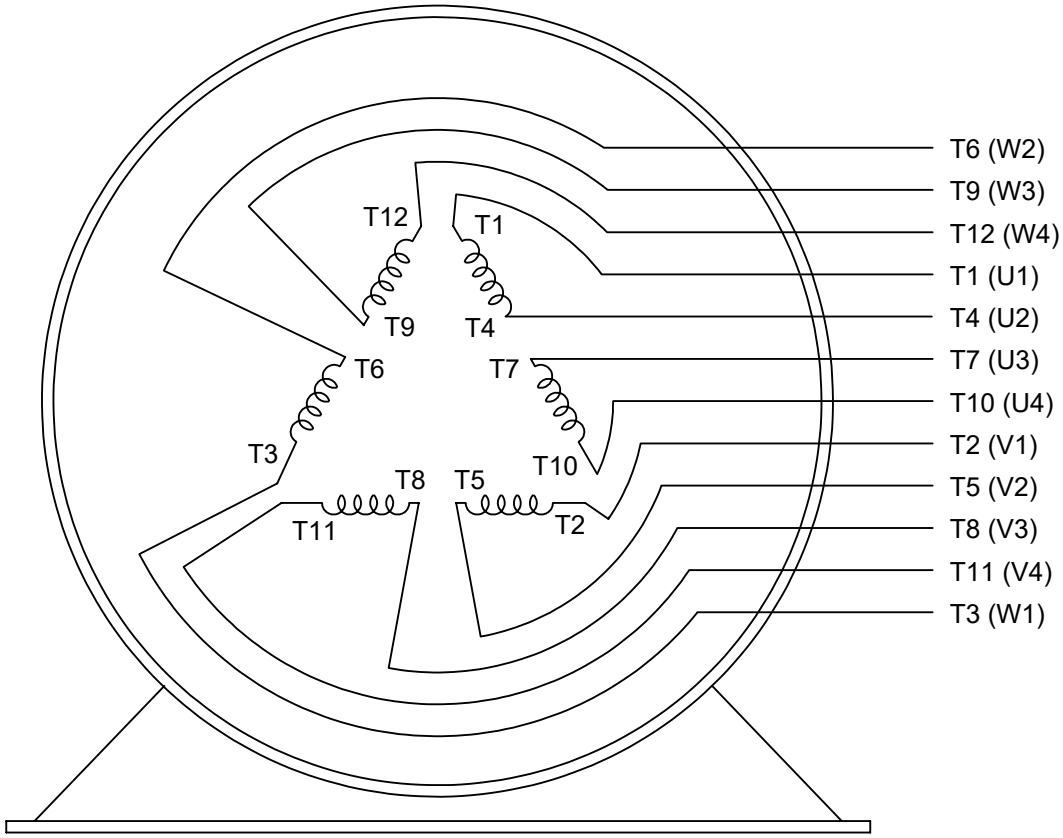

VIEW OF TERMINAL END

DRAWING REVISION: L	REVISION BY: SB	REV DATE/© DATE: 08/01/2025	PRIMARY DIMENSIONS ARE INCH mm DIMENSIONS IN [BRACKETS] ARE FOR REFERENCE ONLY	DRAWN BY: LZ	marathon™
REQUEST NUMBER: CR-0023654	APPROVED BY: SBD	DATE: 08/01/2025		DATE: 01-12-1994	
REQUEST NUMBER DESCRIPTION: DRAWING TITLE BLOCK UPDATED				APPROVED BY: GK	DESCRIPTION: CONN DIAGRAM-EXTERNAL 3Ø-2/1 DELTA-12 LEADS
				DATE: 01-14-1994	
				REFERENCE	MATERIAL / PROCESS/FINISH
				THIRD ANGLE PROJECTION	SIZE: A / DRAWING NUMBER: EE7308AA / SHEET: 1 OF 1

COPYRIGHT (PER REVISION DATE) MARATHON ELECTRIC, LLC. ALL RIGHTS RESERVED. PROPRIETARY AND CONFIDENTIAL INFORMATION - THIS DOCUMENT IS THE PROPERTY OF MARATHON ELECTRIC, LLC. ("OWNER") AND CONTAINS OWNER'S PROPRIETARY INFORMATION. ANY PERSON, CORPORATION OR OTHER FIRM RECEIVING IT IS DEEMED, BY RECEIVING IT, TO AGREE THAT IT, AND/OR ANY PART OF IT, SHALL NOT BE DISCLOSED TO ANY PERSON, CORPORATION OR OTHER ENTITY, DUPLICATED, AND/OR USED, EXCEPT AS EXPRESSLY APPROVED IN WRITING IN ADVANCE BY OWNER. THIS DOCUMENT SHALL BE RETURNED TO OWNER UPON REQUEST. IT MAY BE SUBJECT TO CERTAIN RESTRICTIONS UNDER APPLICABLE EXPORT CONTROL LAWS AND REGULATIONS.

Uncontrolled Copy

Data Sheet

Date: 15-06-2017
Customer:
Attention:
Submitted by: FAREEDA DUDEKULA

marathon® electric

284TSTFCA6001

Submittal

Data @ 460 V

Motor Load Data

Load	0%	25%	50%	75%	100%	115%	125%	LR	
Current (Amps)	7.5	10.4	15.6	21.8	28.1	32.0	34.5	177	
Torque (ft-lb)	0.00	9.2	18.5	27.5	37.0	42.5	46.0	65.0	
RPM	3600	3588	3580	3565	3550	3,540	3525	0	
Efficiency (%)		86.5	91.0	92.4	91.7	91.7	91.0		
P.F. (%)	9.5	64.5	82.0	88.0	90.0	90.0	90.0	35.5	

Motor Speed Data

	LR	Pull-Up	BD	Rated	Idle
Speed (RPM)	0	1800	3500	3550	3600
Current (Amps)	177	160	105	28.1	7.5
Torque (ft-lb)	65.0	55.0	95.0	37.0	0.00

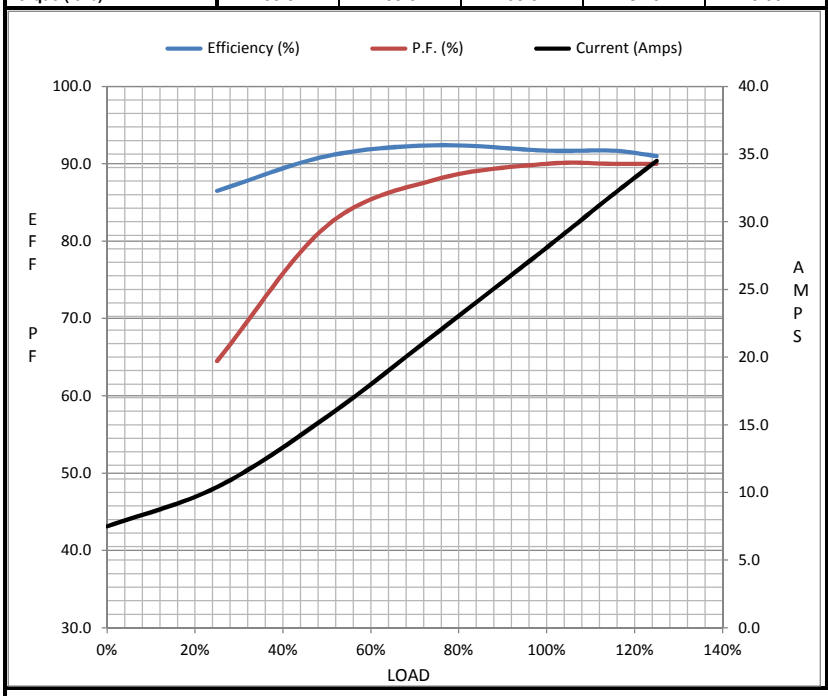

Information Block

HP	25.0
Sync. RPM	3600
Frame	284
Enclosure	TEFC
Construction	TFC
Voltage	230/460#190/38(V
Frequency	60 Hz
Design	A
LR Code letter	G
Service Factor	1.15
Temp Rise @ FL	50 ° C
Duty	CONT
Ambient	40 ° C
Elevation	1,000 feet
Rotor/Shaft wk²	2.50 Lb-Ft²
Ref Wdg	CHT28420003 NONE
Sound Pressure @ 1M	72 dBA
VFD Rating	VARIABLE 10:1
Outline Dwg	B-SS620246
Conn. Diag	A-EE7308AA

Additional Specifications:

0

365THFS8036

EQUIV CKT (OHMS / PHASE)

R1	R2	X1	X2	Xm
0.2270	0.1250	0.8280	0.9750	35.1540

Speed -Torque Curve

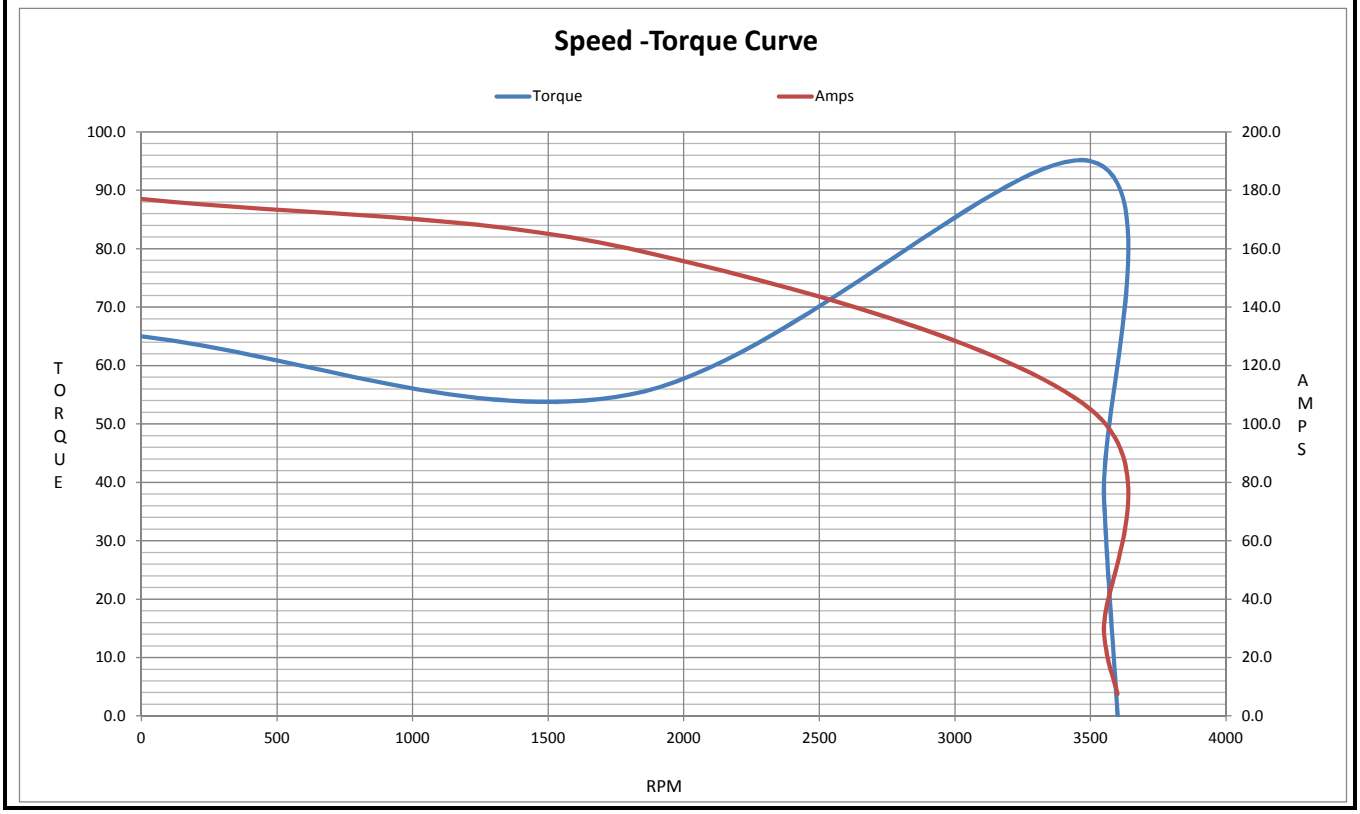

Uncontrolled Copy

CERTIFICATION DATA SHEET

Model#:	284TSTFCA6001 AA	**WINDING#:**	CHT28420003 NONE 1
CONN. DIAGRAM:	A-EE7308AA	**ASSEMBLY:**	F1/F2 CAPABLE
OUTLINE:	B-SS620246		

TYPICAL MOTOR PERFORMANCE DATA

HP	KW	SYNC. RPM	F.L. RPM	FRAME	ENCLOSURE	KVA CODE	DESIGN
25&20	18.7&14.9	3600	3553&2960	284TS	TEFC	G	B

PH	Hz	VOLTS	FL AMPS	START TYPE	DUTY	INSL	S.F	AMB°C	ELEVATION
3	60/50	230/460#190/380	57/28.5&55/27.4	Y START D RUN OR INV	CONTINUOUS	F7	1.15/1.15	40	3300

FULL LOAD EFF: 91.7&91	3/4 LOAD EFF: 92.4	1/2 LOAD EFF: 91	GTD. EFF	ELEC. TYPE	NO LOAD AMPS
FULL LOAD PF: 89.5&87.5	**3/4 LOAD PF: 88**	**1/2 LOAD PF: 82**	91	SQ CAGE INV RATED	15 / 7.5

F.L. TORQUE	LOCKED ROTOR AMPS	L.R. TORQUE	B.D. TORQUE	F.L. RISE°C
37 LB-FT	354 / 177	65 LB-FT 176	95 LB-FT 257	50

SOUND PRESSURE @ 3 FT.	SOUND POWER	ROTOR WK^2	MAX. WK^2	SAFE STALL TIME	STARTS /HOUR	APPROX. MOTOR WGT
72 dBA	82 dBA	2.5 LB-FT^2	32 LB-FT^2	20 SEC.	2	460 LBS.

*** SUPPLEMENTAL INFORMATION ***

DE BRACKET TYPE	ODE BRACKET TYPE	MOUNT TYPE	ORIENTATION	SEVERE DUTY	HAZARDOUS LOCATION	DRIP COVER	SCREENS	PAINT
STANDARD	STANDARD	RIGID	HORIZONTAL	FALSE	NONE	FALSE	NONE	BLUE (ENAMEL)

BEARINGS		GREASE	SHAFT TYPE	SPECIAL DE	SPECIAL ODE	SHAFT MATERIAL	FRAME MATERIAL
DE	OPE						
BALL 6211	BALL 6211	POLYREX EM	TS	NONE	NONE	1045 HOT ROLLED (C-204)	CAST IRON

THERMO-PROTECTORS				THERMISTORS	CONTROL	SPACE /n HEATERS
THERMOSTATS	PROTECTORS	WDG RTDs	BRG RTDs			
NONE	NOT	NONE	NONE	NONE	FALSE	NONE VOLTS

If Inverter equals NONE, contact factory for further information

INVERTER TORQUE: VARIABLE 10:1
INV. HP SPEED RANGE: NONE

ENCODER: NONE
NONE NONE
NONE NONE PPR

BRAKE: NONE NONE
NONE P/N NONE
NONE NONE
NONE FT-LB NONE V NONE Hz

*
NOTES
*

DATE: 06/22/2017 04:39:09 AM
FORM 3531 REV.3 02/07/99
** Subject to change without notice.