PRODUCT INFORMATION PACKET

Model No: 056T34F15680
Catalog No: FX01BK002
FLEX-IN-1™ General Purpose Motor, 1 & 1 HP, 3 Ph, 60 & 50 Hz, 208-230/460 & 190/380 V, 3600 & 3000 RPM, 56C Frame, TEFC



Regal and LEESON are trademarks of Regal Rexnord Corporation or one of its affiliated companies.
©2025 Regal Rexnord Corporation, All Rights Reserved. MC017097E

Nameplate Specifications

Phase	3	Output HP	1 & 1 Hp
Output KW	0.75 & 0.75 kW	Voltage	208-230/460 & 190/380 V
Speed	3450 & 2850 rpm	Service Factor	1.15 & 1.00
Frame	56C	Enclosure	Totally Enclosed Fan Cooled
Thermal Protection	No Protection	Efficiency	80 & 80 %
Ambient Temperature	40 °C	Frequency	60 & 50 Hz
Current	3-3/1.5 & 3.2/1.6 A	Power Factor	83.5
Duty	Continuous	Insulation Class	F
Design Code	B	KVA Code	K
Drive End Bearing Size	6203	Opp Drive End Bearing Size	6203
UL	Recognized	CSA	Y
CE	Y	IP Code	43
Number of Speeds	1		

Technical Specifications

Electrical Type	Squirrel Cage Inverter Rated	Starting Method	Line Or Inverter
Poles	2	Rotation	Reversible
Resistance Main	19.5 Ohms	Mounting	Bolt-on Base
Motor Orientation	Horizontal Or Up Or Down	Drive End Bearing	Ball
Opp Drive End Bearing	Ball	Frame Material	Rolled Steel
Shaft Type	NEMA 56	Shaft Diameter	0.625 in
Assembly/Box Mounting	F1 F2/F3 CAPABLE	Inverter Load	CONSTANT 10:1
Connection Drawing	CDTD127	Outline Drawing	OL56100863-001

This is an uncontrolled document once printed or downloaded and is subject to change without notice. Date Created:07/29/2025

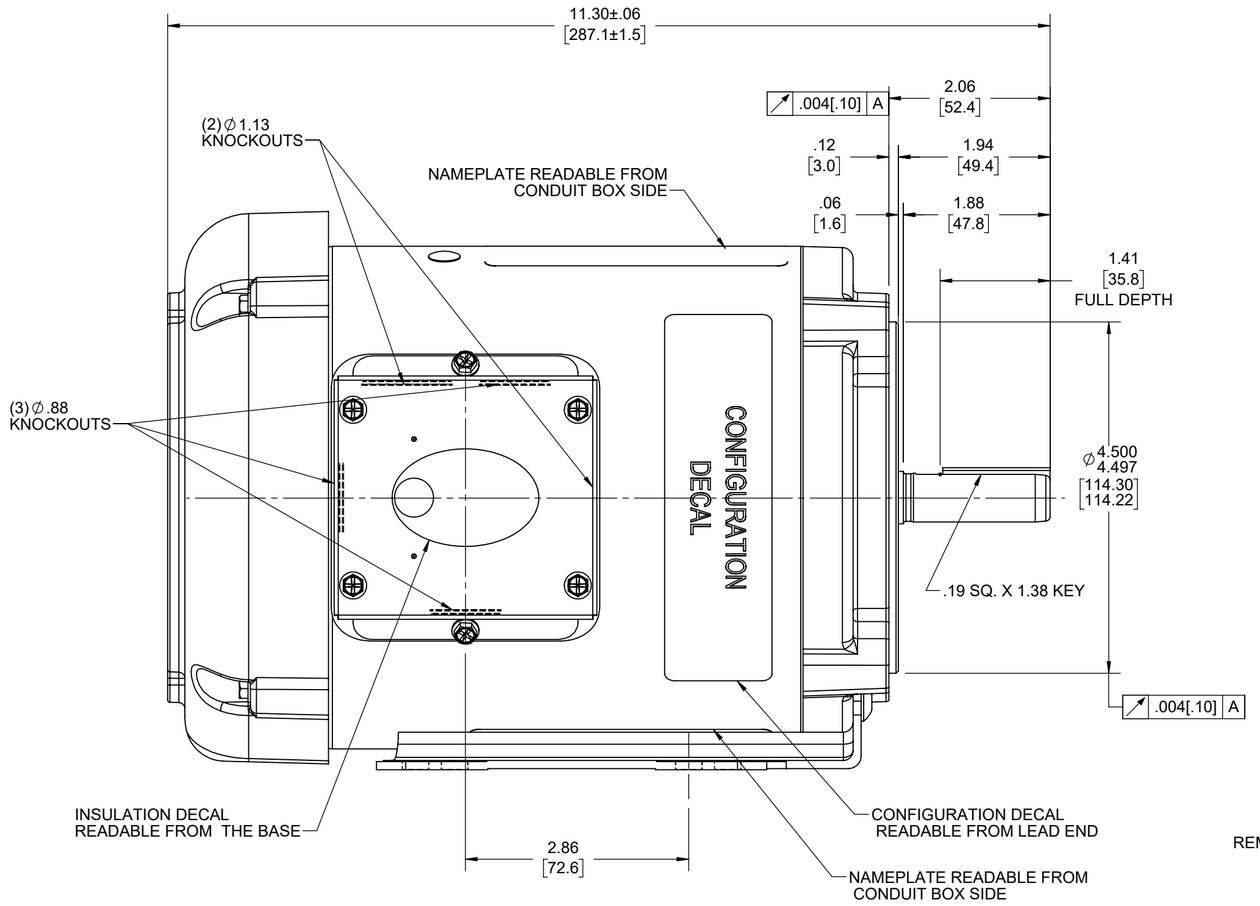

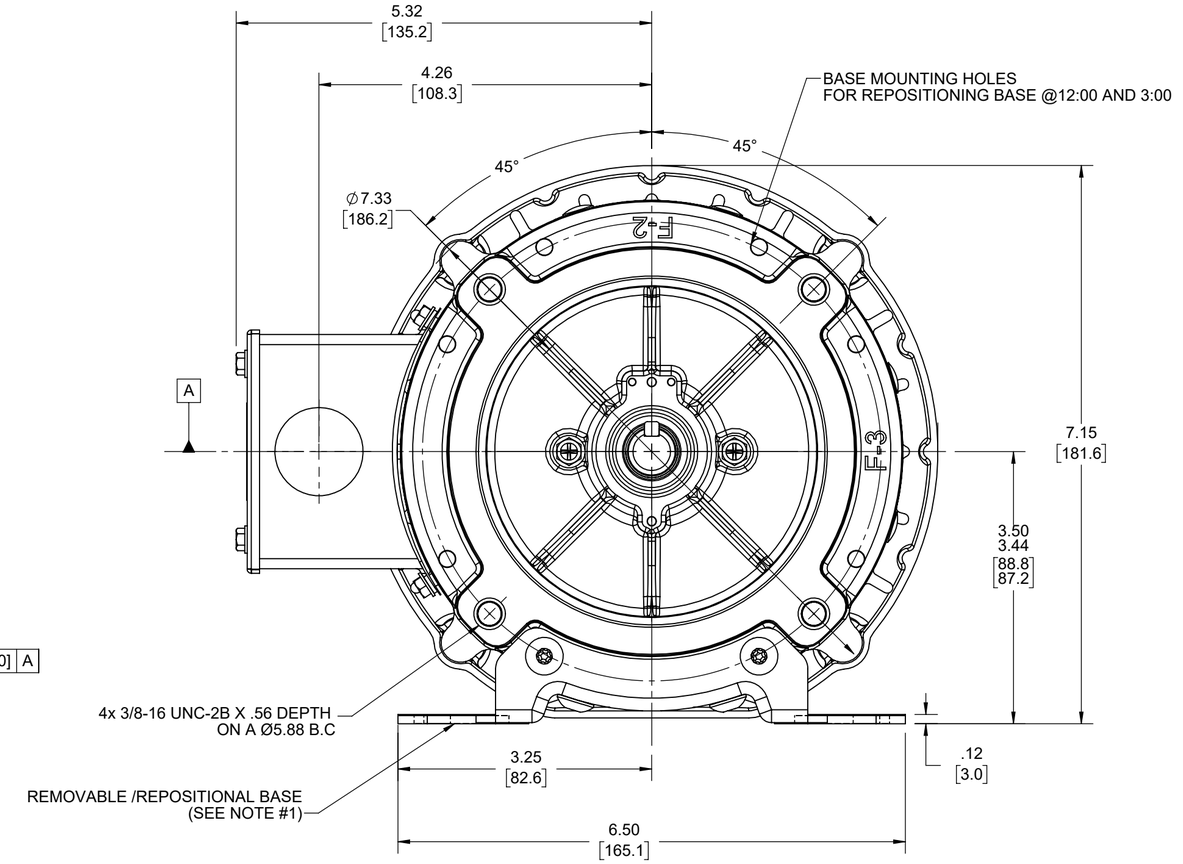

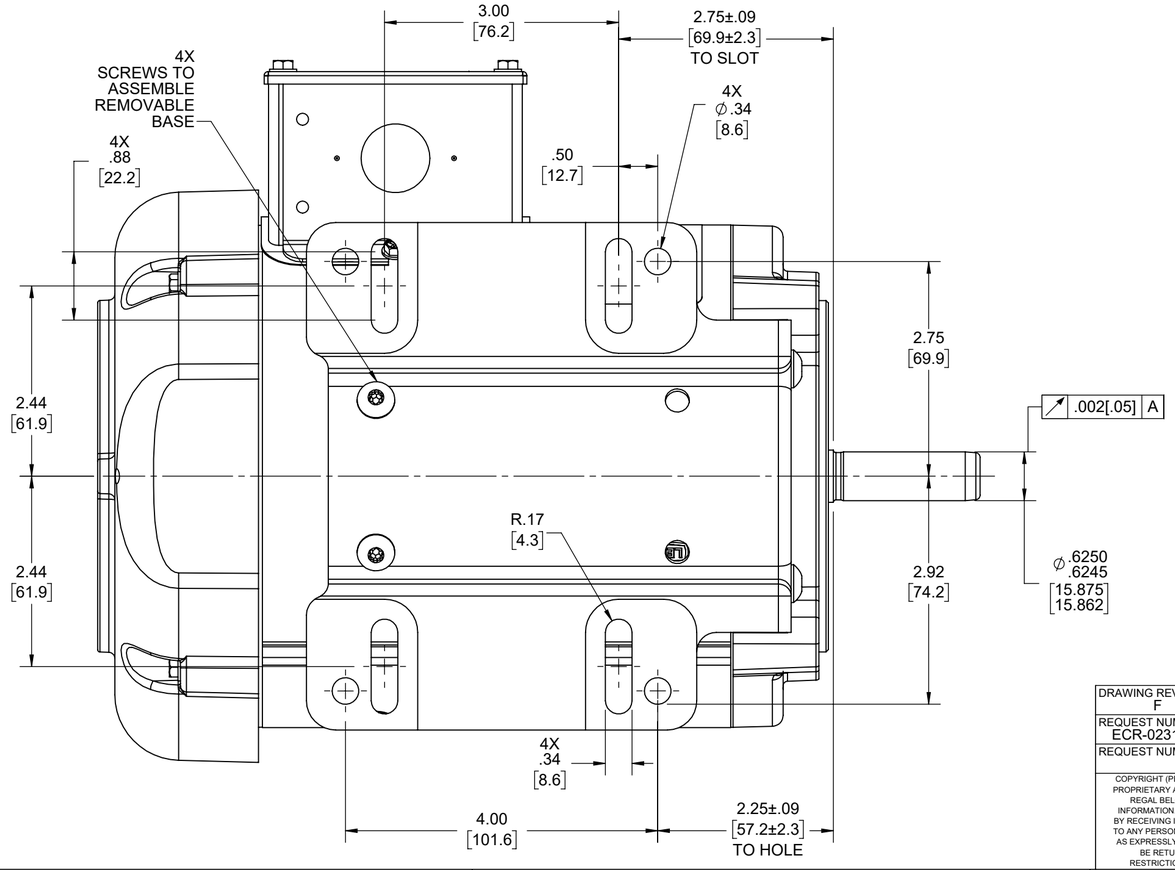

NOTES:

1) REMOVABLE / REPOSITIONAL BASE CAN BE REMOVED FOR C-FACE MOUNTING OR REPOSITIONED TO 12:00 OR 3:00 FACING SHAFT END OF MOTOR FOR NEMA F-2 OR F-3 CONDUIT BOX LOCATION.
2) KEY TO BE SHIPPED IN BAG WITH HOLE PLUGS AND BASE MOUNTING INSTRUCTION SHEET.

PLUGGED BASE MOUNTING HOLES
FOR REPOSITONING BASE @12:00 OR 3:00

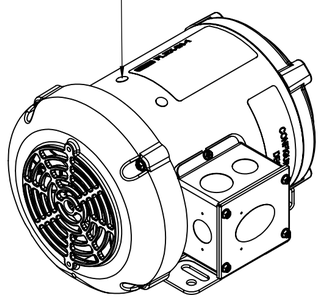

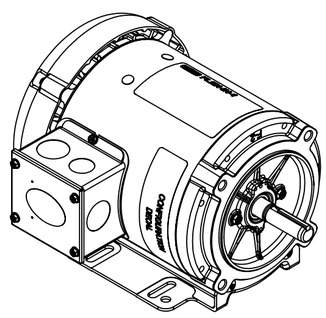

DRAWING REVISION: F	REVISION BY: M.P	REV DATE/© DATE: 03/05/2024
REQUEST NUMBER: ECR-0231732	APPROVED BY: PVR	DATE: 03/05/2024
REQUEST NUMBER DESCRIPTION: UPDATED AS PER ECR		

COPYRIGHT (PER REVISION DATE) REGAL BELOIT AMERICA, INC. ALL RIGHTS RESERVED. PROPRIETARY AND CONFIDENTIAL INFORMATION - THIS DOCUMENT IS THE PROPERTY OF REGAL BELOIT AMERICA, INC. ("OWNER") AND CONTAINS OWNER'S PROPRIETARY INFORMATION. ANY PERSON, CORPORATION OR OTHER FIRM RECEIVING IT IS DEEMED, BY RECEIVING IT, TO AGREE THAT IT, AND/OR ANY PART OF IT, SHALL NOT BE DISCLOSED TO ANY PERSON, CORPORATION OR OTHER ENTITY, DUPLICATED, AND/OR USED, EXCEPT AS EXPRESSLY APPROVED IN WRITING IN ADVANCE BY OWNER. THIS DOCUMENT SHALL BE RETURNED TO OWNER UPON REQUEST. IT MAY BE SUBJECT TO CERTAIN RESTRICTIONS UNDER APPLICABLE EXPORT CONTROL LAWS AND REGULATIONS.

TOLERANCES (EXCEPT AS NOTED):

DEC.	INCH	mm	ANGLE
.X	±0.1	[±3]	±0.5°
.XX	±0.02	[±0.5]	
.XXX	±0.005	[±0.13]	
.XXXX	±0.0005	[±0.013]	

REMOVE BURRS & BREAK SHARP EDGES: .003/.015 [.08/.38] X 45°
CORNER FILLETS: R.02 [.5]
MACHINED SURFACES: 125 INCH / 3.2 mm
mm DIMENSIONS IN [BRACKETS] ARE FOR REFERENCE ONLY

DRAWN BY	SRIKANTH
DATE	9/5/2022
APPROVED BY	SN
DATE	9/5/2022
REFERENCE	OL56100863
THIRD ANGLE PROJECTION	

Regal Rexnord — Regal Beloit America, Inc.

DESCRIPTION: OUTLINE
56-140FR,TEFC, BOLT-ON

MATERIAL | PROCESS/FINISH

SIZE	DRAWING NUMBER	SHEET
C	OL56100863-001	1 OF3

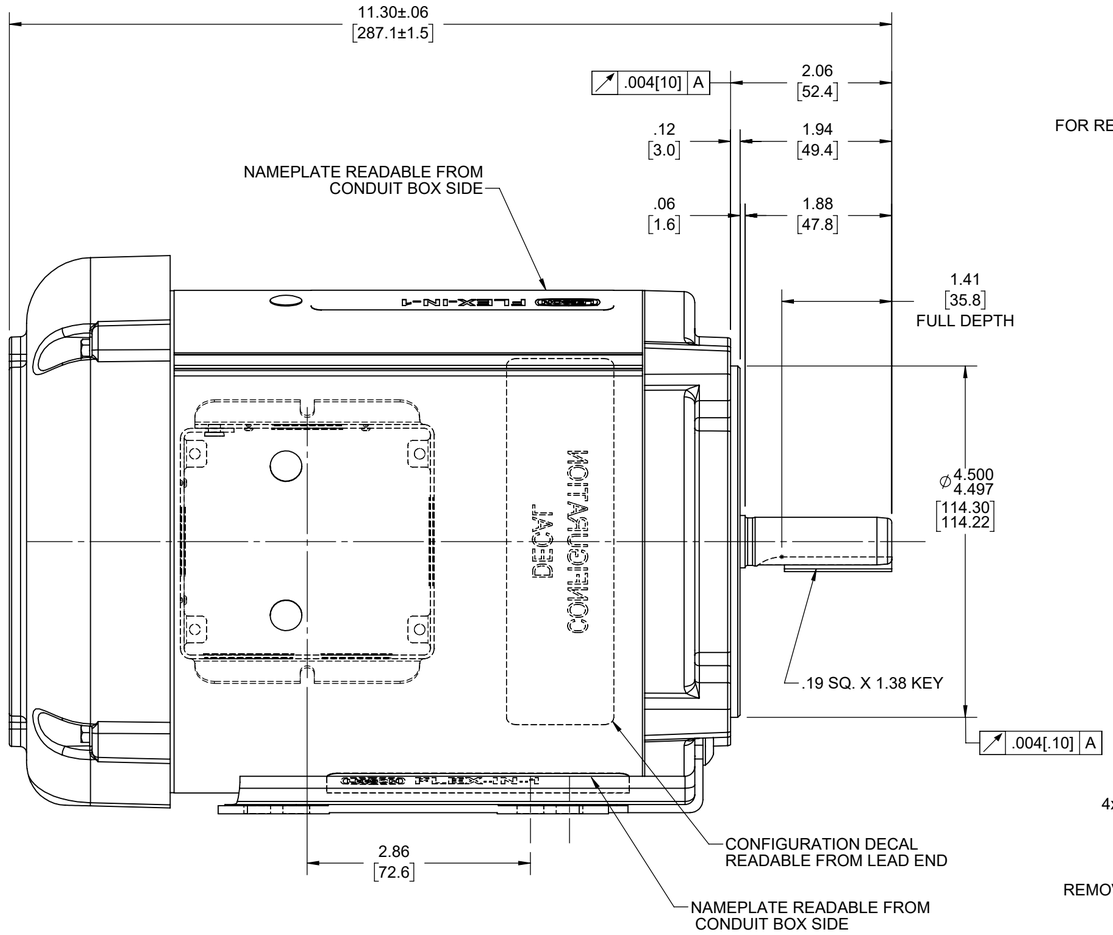

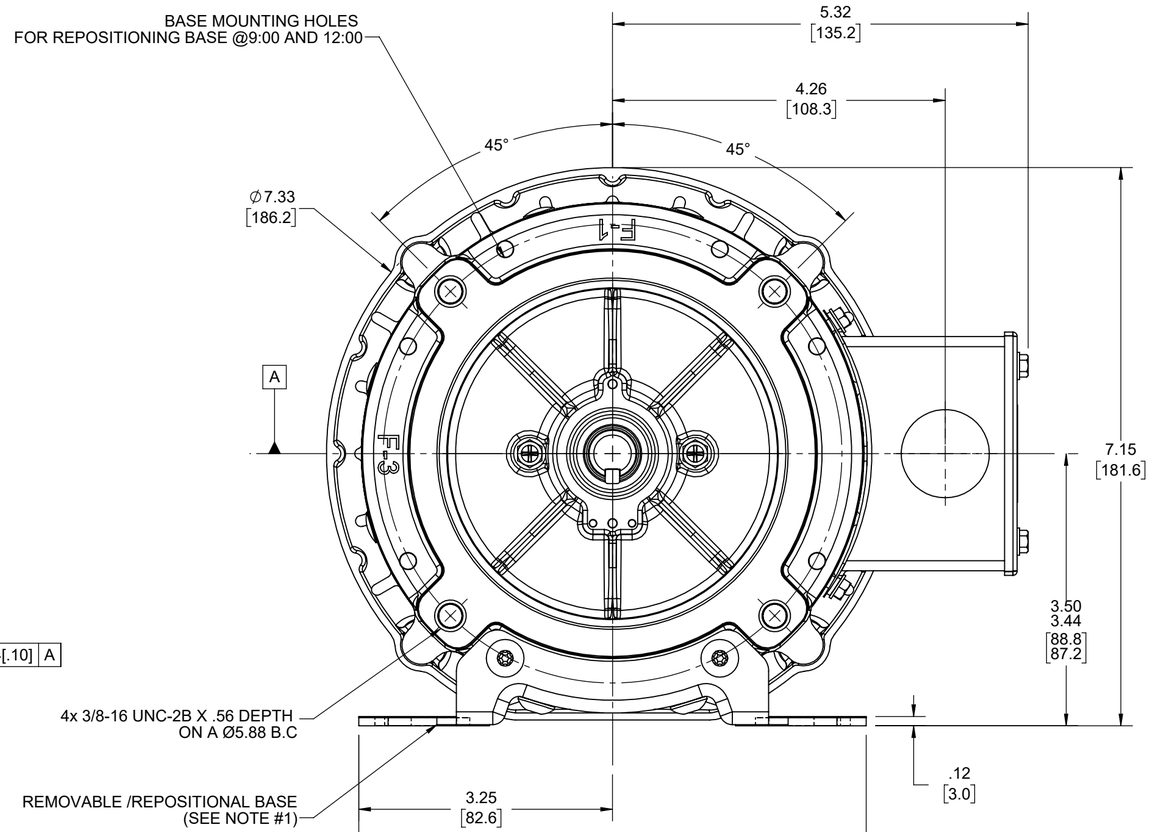

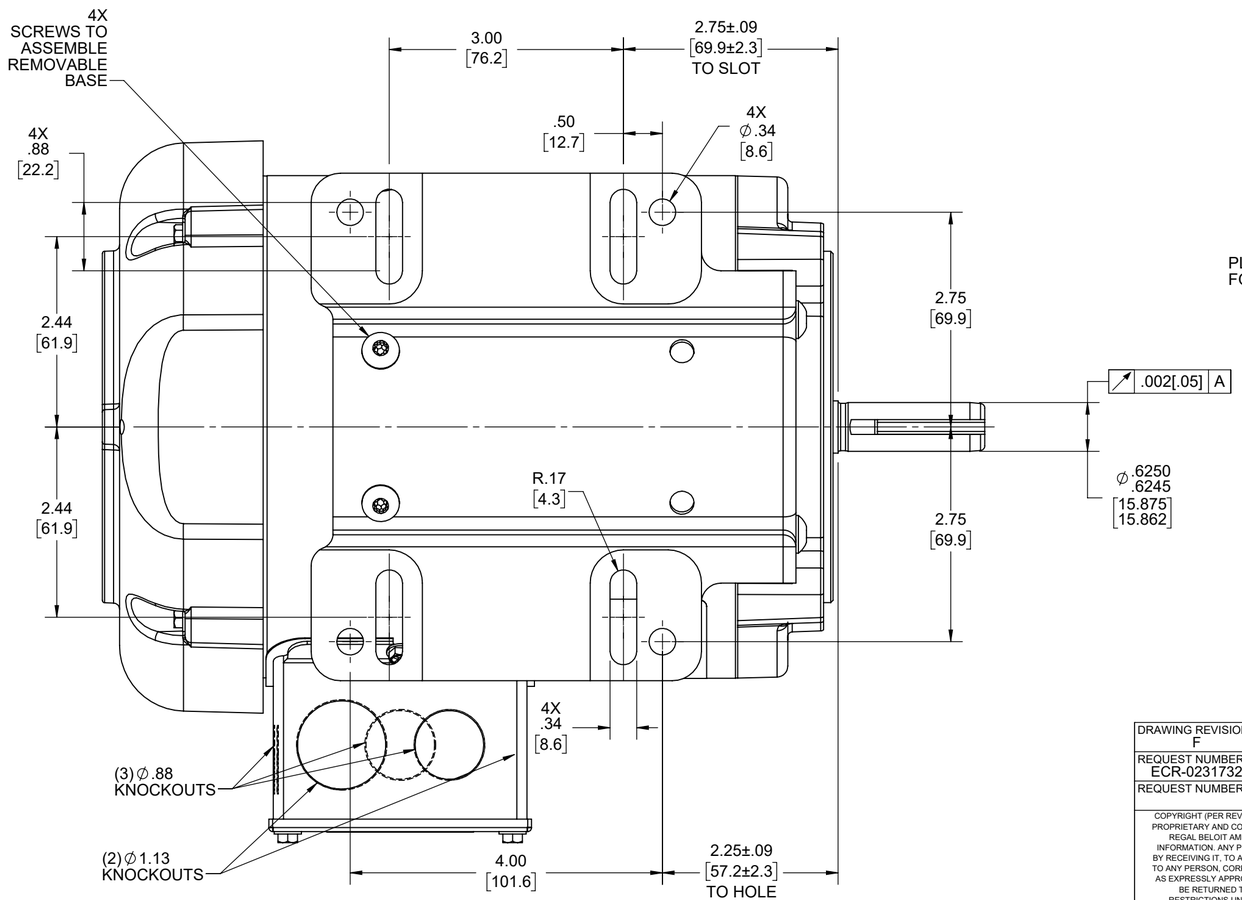

NOTES:

1) REMOVABLE / REPOSITIONAL BASE CAN BE REMOVED FOR C-FACE MOUNTING OR REPOSITIONED TO 12:00 OR 9:00 FACING SHAFT END OF MOTOR FOR NEMA F-1 OR F-3 CONDUIT BOX LOCATION.
2) KEY TO BE SHIPPED IN BAG WITH HOLE PLUGS AND BASE MOUNTING INSTRUCTION SHEET.

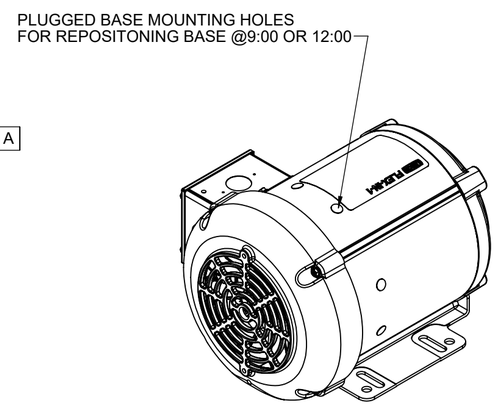

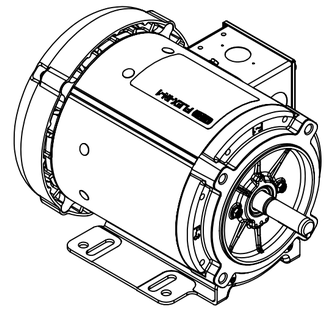

DRAWING REVISION: F	REVISION BY: M.P	REV DATE/© DATE: 03/05/2024	TOLERANCES (EXCEPT AS NOTED): DEC. .X ±0.1 .XX ±0.02 .XXX ±0.005 .XXXX ±0.0005 / INCH / mm / ANGLE ±0.5°	DRAWN BY: SRIKANTH	Regal Rexnord — Regal Beloit America, Inc.
REQUEST NUMBER: ECR-0231732	APPROVED BY: PVR	DATE: 03/05/2024	[±3] [±0.5] [±0.13] [±0.013]	DATE: 9/5/2022	
REQUEST NUMBER DESCRIPTION: UPDATED AS PER ECR			REMOVE BURRS & BREAK SHARP EDGES: .003/.015 [.08/.38] X 45° CORNER FILLETS: R.02 [.5] MACHINED SURFACES: 125 INCH / 3.2 mm	APPROVED BY: SN	DESCRIPTION: OUTLINE 56-140FR,TEFC, BOLT-ON
			mm DIMENSIONS IN [BRACKETS] ARE FOR REFERENCE ONLY	DATE: 9/5/2022	
				REFERENCE: OL56100863	MATERIAL / PROCESS/FINISH
				THIRD ANGLE PROJECTION	SIZE: C — DRAWING NUMBER: OL56100863-001 — SHEET: 2 OF3

COPYRIGHT (PER REVISION DATE) REGAL BELOIT AMERICA, INC. ALL RIGHTS RESERVED. PROPRIETARY AND CONFIDENTIAL INFORMATION - THIS DOCUMENT IS THE PROPERTY OF REGAL BELOIT AMERICA, INC. ("OWNER") AND CONTAINS OWNER'S PROPRIETARY INFORMATION. ANY PERSON, CORPORATION OR OTHER FIRM RECEIVING IT IS DEEMED, BY RECEIVING IT, TO AGREE THAT IT, AND/OR ANY PART OF IT, SHALL NOT BE DISCLOSED TO ANY PERSON, CORPORATION OR OTHER ENTITY, DUPLICATED, AND/OR USED, EXCEPT AS EXPRESSLY APPROVED IN WRITING IN ADVANCE BY OWNER. THIS DOCUMENT SHALL BE RETURNED TO OWNER UPON REQUEST. IT MAY BE SUBJECT TO CERTAIN RESTRICTIONS UNDER APPLICABLE EXPORT CONTROL LAWS AND REGULATIONS.

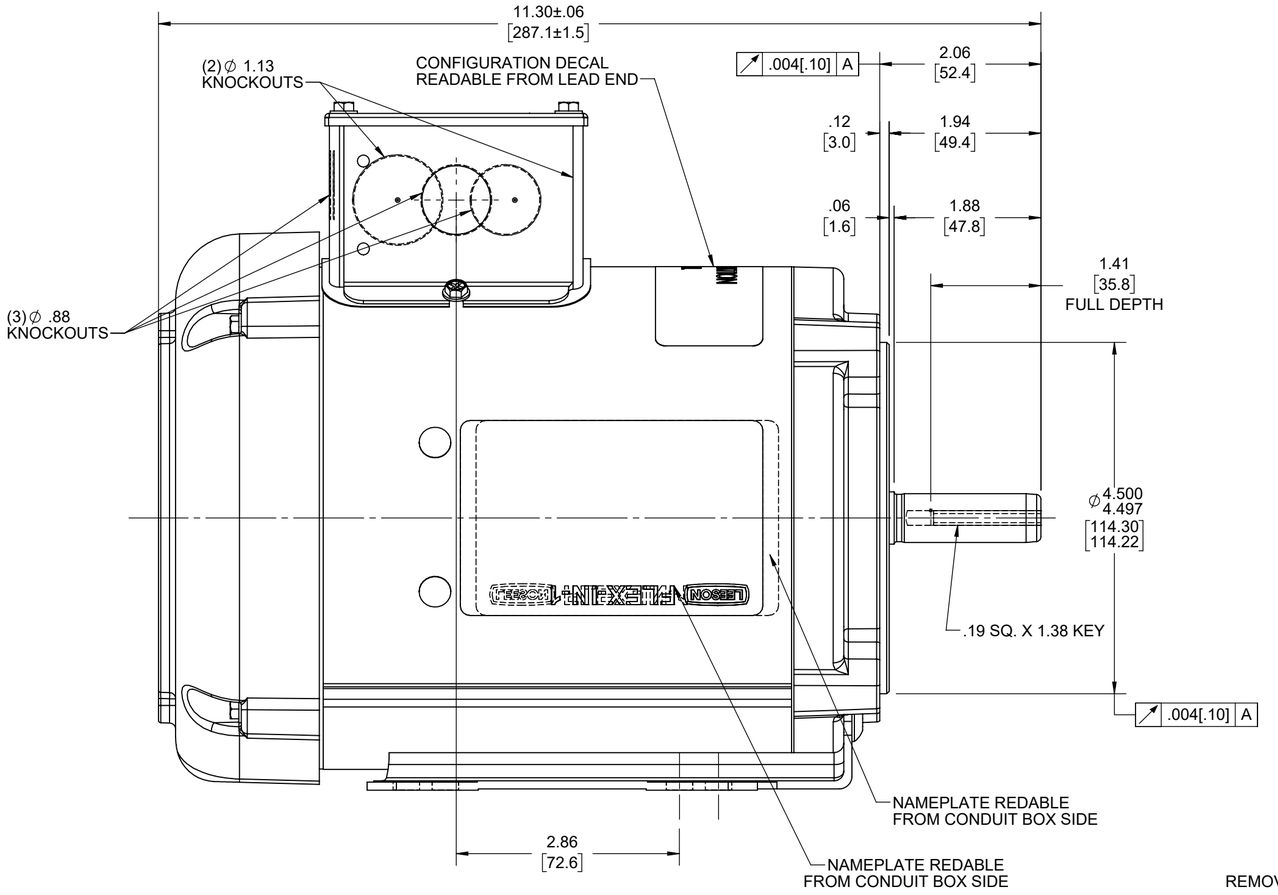

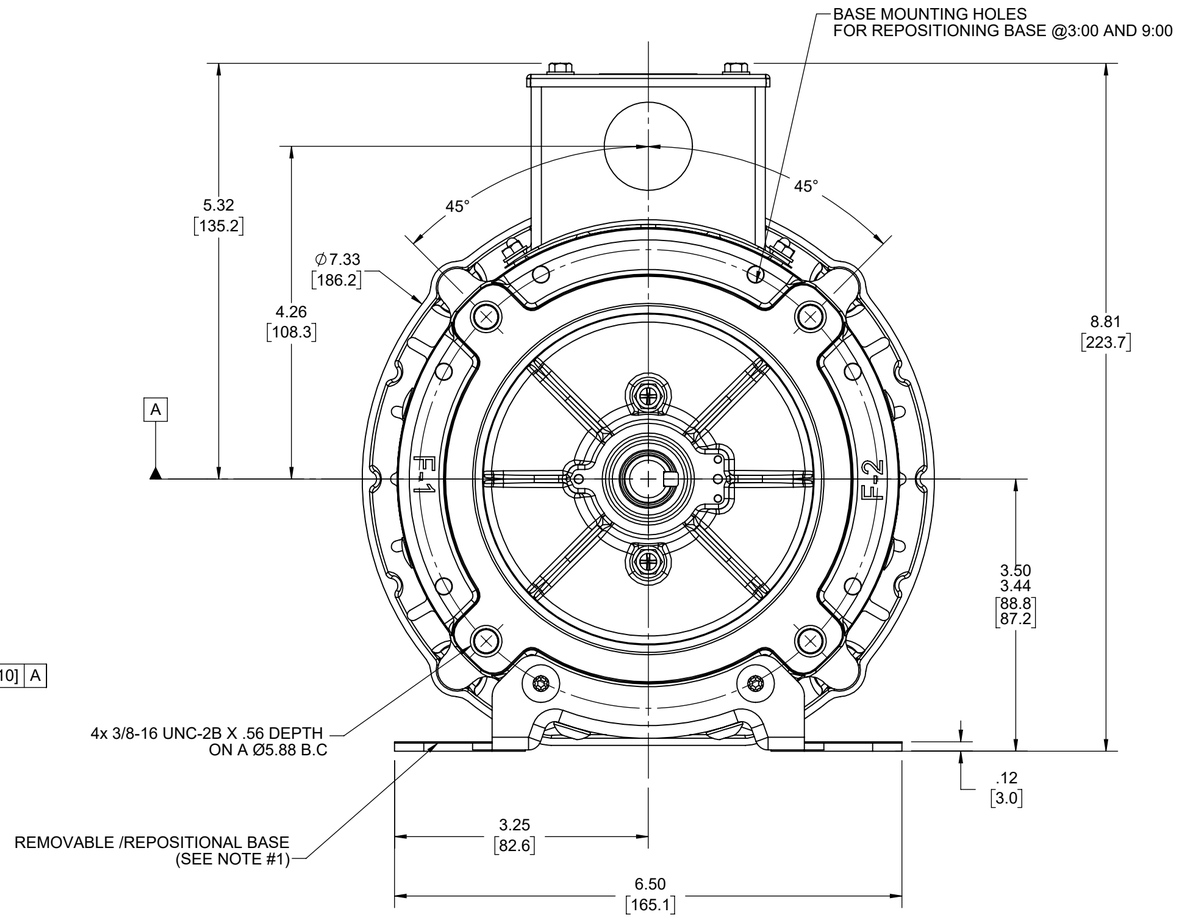

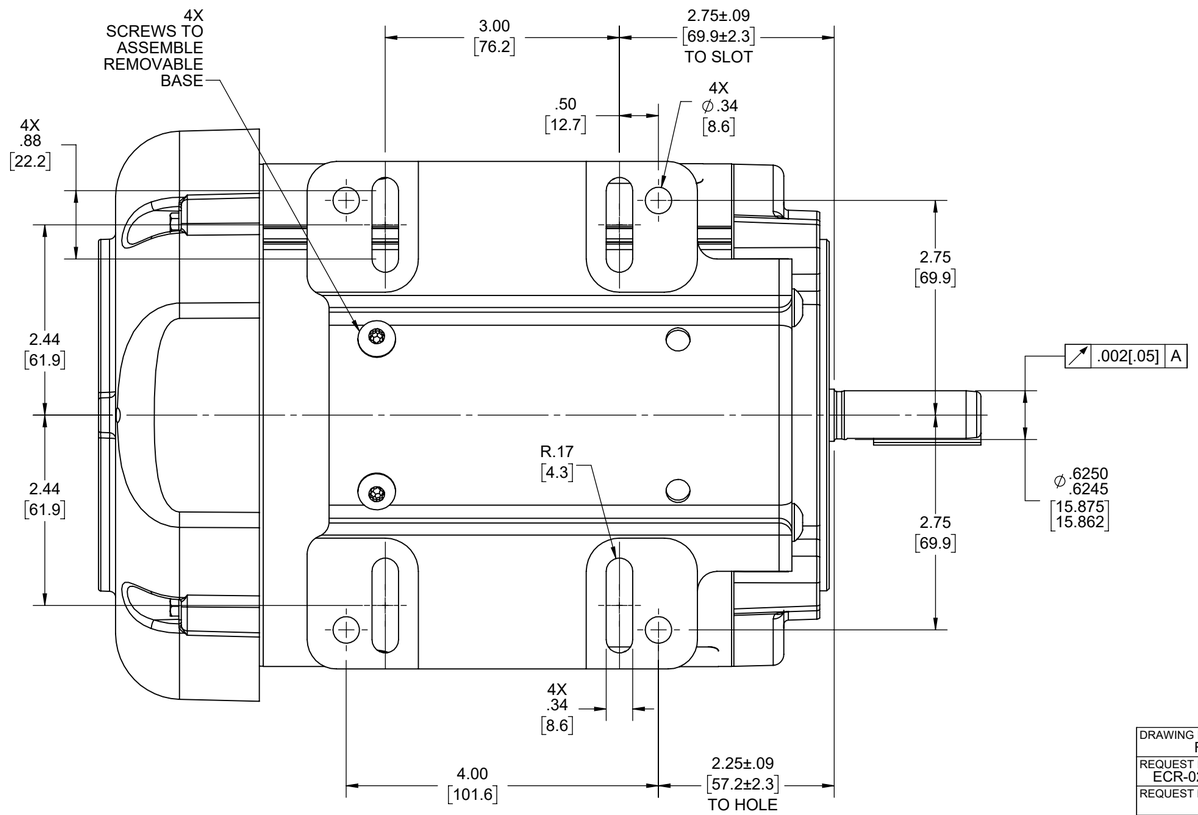

NOTES:

1) REMOVABLE / REPOSITIONAL BASE CAN BE REMOVED FOR C-FACE MOUNTING OR REPOSITIONED TO 9:00 OR 3:00 FACING SHAFT END OF MOTOR FOR NEMA F-1 OR F-2 CONDUIT BOX LOCATION.
2) KEY TO BE SHIPPED IN BAG WITH HOLE PLUGS AND BASE MOUNTING INSTRUCTION SHEET.

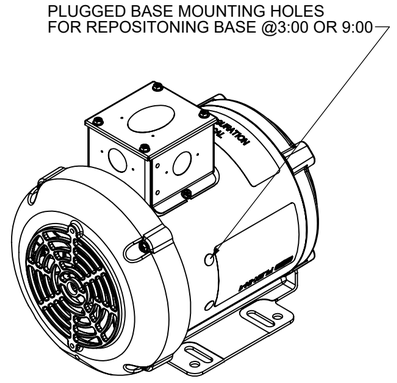

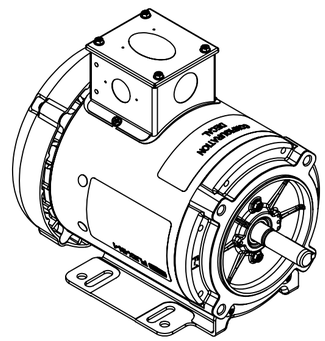

DRAWING REVISION: F	REVISION BY: M.P	REV DATE/© DATE: 03/05/2024	TOLERANCES (EXCEPT AS NOTED):	DRAWN BY: SRIKANTH	Regal Rexnord — Regal Beloit America, Inc.
REQUEST NUMBER: ECR-0231732	APPROVED BY: PVR	DATE: 03/05/2024	DEC. INCH mm ANGLE .X ±0.1 [±3] ±0.5° .XX ±0.02 [±0.5] .XXX ±0.005 [±0.13] .XXXX ±0.0005 [±0.013]	DATE: 9/5/2022	DESCRIPTION: OUTLINE 56-140FR,TEFC, BOLT-ON
REQUEST NUMBER DESCRIPTION: UPDATED AS PER ECR			REMOVE BURRS & BREAK SHARP EDGES: .003/.015 [.08/.38] X 45° CORNER FILLETS: R.02 [.5] MACHINED SURFACES: 125 INCH / 3.2 mm mm DIMENSIONS IN [BRACKETS] ARE FOR REFERENCE ONLY	APPROVED BY: SN	
				DATE: 9/5/2022	
				REFERENCE: OL56100863	MATERIAL / PROCESS/FINISH
				THIRD ANGLE PROJECTION	SIZE: C — DRAWING NUMBER: OL56100863-001 — SHEET: 3 OF3

COPYRIGHT (PER REVISION DATE) REGAL BELOIT AMERICA, INC. ALL RIGHTS RESERVED. PROPRIETARY AND CONFIDENTIAL INFORMATION - THIS DOCUMENT IS THE PROPERTY OF REGAL BELOIT AMERICA, INC. ("OWNER") AND CONTAINS OWNER'S PROPRIETARY INFORMATION. ANY PERSON, CORPORATION OR OTHER FIRM RECEIVING IT IS DEEMED, BY RECEIVING IT, TO AGREE THAT IT, AND/OR ANY PART OF IT, SHALL NOT BE DISCLOSED TO ANY PERSON, CORPORATION OR OTHER ENTITY, DUPLICATED, AND/OR USED, EXCEPT AS EXPRESSLY APPROVED IN WRITING IN ADVANCE BY OWNER. THIS DOCUMENT SHALL BE RETURNED TO OWNER UPON REQUEST. IT MAY BE SUBJECT TO CERTAIN RESTRICTIONS UNDER APPLICABLE EXPORT CONTROL LAWS AND REGULATIONS.

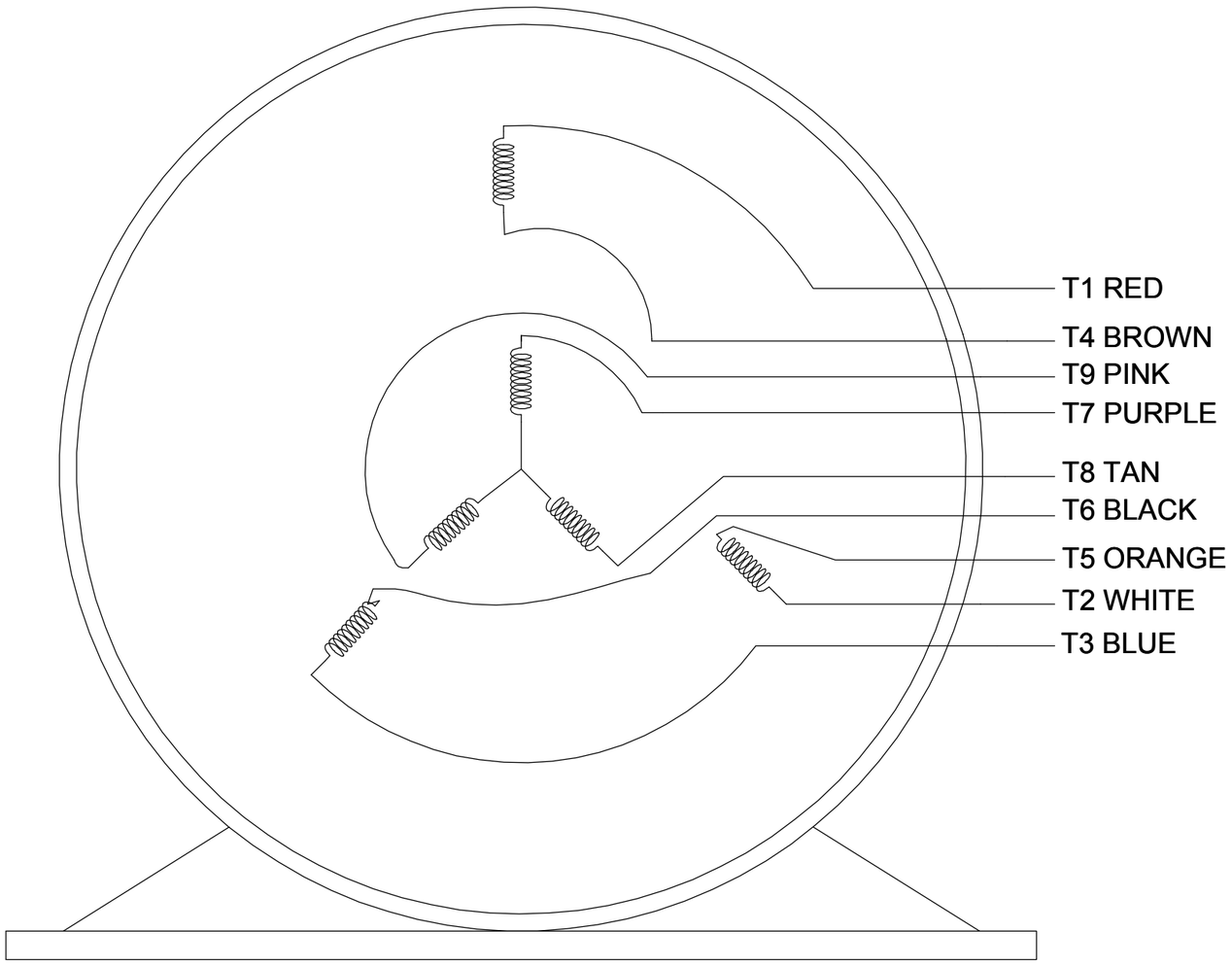

VIEW OF TERMINAL END

NOTE:

1. TO REVERSE ROTATION, INTERCHANGE ANY TWO LINE CONNECTIONS TO L1, L2, OR L3.
2. CONNECTION DIAGRAM-NAMEPLATE
   DD10123-001 - CCWLE
   DD10199-001 - CWLE

CCW LOW VOLTAGE

001

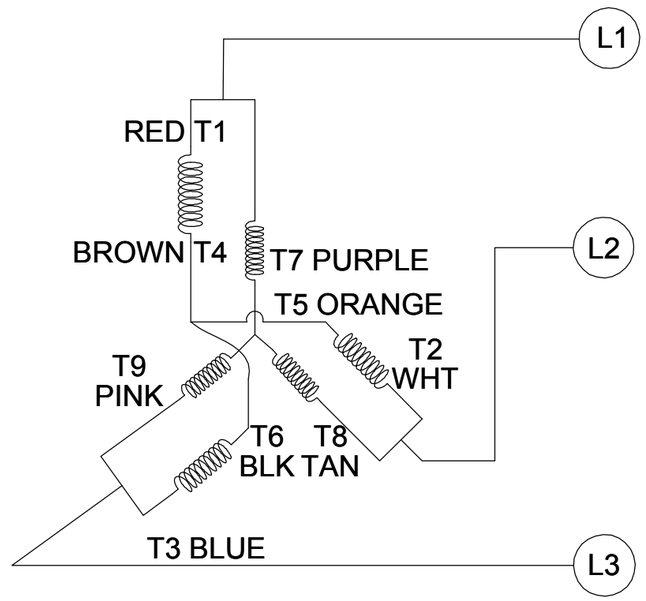

CCW HIGH VOLTAGE

002

DRAWING REVISION D	REVISION BY SHESHI	DATE 01/11/2019
ECO ECO-0159881	APPROVED BY CD	DATE 01/11/2019
ECO DESCRIPTION ADDED DD10199-001		

COPYRIGHT REGAL BELOIT AMERICA, INC. ALL RIGHTS RESERVED.
PROPRIETARY AND CONFIDENTIAL INFORMATION - THIS DOCUMENT IS THE PROPERTY OF REGAL BELOIT AMERICA, INC. ("OWNER") AND CONTAINS OWNER'S PROPRIETARY INFORMATION. ANY PERSON, CORPORATION OR OTHER FIRM RECEIVING IT IS DEEMED, BY RECEIVING IT, TO AGREE THAT IT, AND/OR ANY PART OF IT, SHALL NOT BE DISCLOSED TO ANY PERSON, CORPORATION OR OTHER ENTITY, DUPLICATED, AND/OR USED, EXCEPT AS EXPRESSLY APPROVED IN WRITING IN ADVANCE BY OWNER. THIS DOCUMENT SHALL BE RETURNED TO OWNER UPON REQUEST. IT MAY BE SUBJECT TO CERTAIN RESTRICTIONS UNDER APPLICABLE EXPORT CONTROL LAWS AND REGULATIONS.

TOLERANCES UNLESS OTHERWISE SPECIFIED:

DEC.	INCH	mm	ANGLE
.X	±0.1	[±2.5]	±0.5°
.XX	±0.01	[±0.25]	
.XXX	±0.005	[±0.127]	
.XXXX	±0.0005	[±0.0127]	

REMOVE BURRS & BREAK SHARP
EDGES: .003/.015 [.076/.381]
CORNER FILLETS: .02 [.51]
MACHINED SURFACES: 125 INCH / 3.2 mm
mm SHOWN IN [BRACKETS]

DRAWN BY G. RODRIGUEZ	Regal Beloit America, Inc.		
DATE 12-01-2017			
APPROVED BY J. A. MORENO	DESCRIPTION CONN DIAGRAM-EXTERNAL		
DATE 12-01-2017			
REFERENCE CDTD103	MATERIAL	PROCESS/FINISH	
THIRD ANGLE PROJECTION	SIZE B	DRAWING NUMBER CDTD127	SHEET 1 OF 1

EC Declaration of Conformity

The undersigned representing
the manufacturer:

Regal Beloit America
1946 West Cook Road
Fort Wayne, IN 46818

and the authorized representative
established within the Community:

Regal Beloit Italy
Via Modena, 18
24040 Ciserano(BG) - Italy

are committed to providing customers with products that comply with applicable regulations and international protocols to which they are subject, including the requirements of the European Parliament Directive on the Harmonization of the laws relating to electrical equipment designed for use within certain voltage limits (2014/35/EU).

Regal Beloit America declares that the following product(s), to which this declaration relates, are in conformity with the relevant sections of the EC standards listed below.

This statement supersedes any statements previously issued pertaining to the product(s) listed below and is subject to change without notice.

Model No : 056T34F15680

(Model No. may contain prefix and/or suffix characters)

Catalog No : FX01BK002

Rework No : N/A

Directives :

Low Voltage Directive 2014/35/EU

Harmonized Standards Used :

EN 60034-1: 2010 (IEC 60034-1: 2010)
EN 60034-5: 2001/A1:2007 (IEC 60034-5: 2000/A1:2006)

Authorized Representative:

Zach Stauffer
Vice President, Engineering

Authorized Representative in the Community:

Stefano Casiraghi
Technology Director, Engineering

Created on 07/08/2025

CE 25