34LYL031

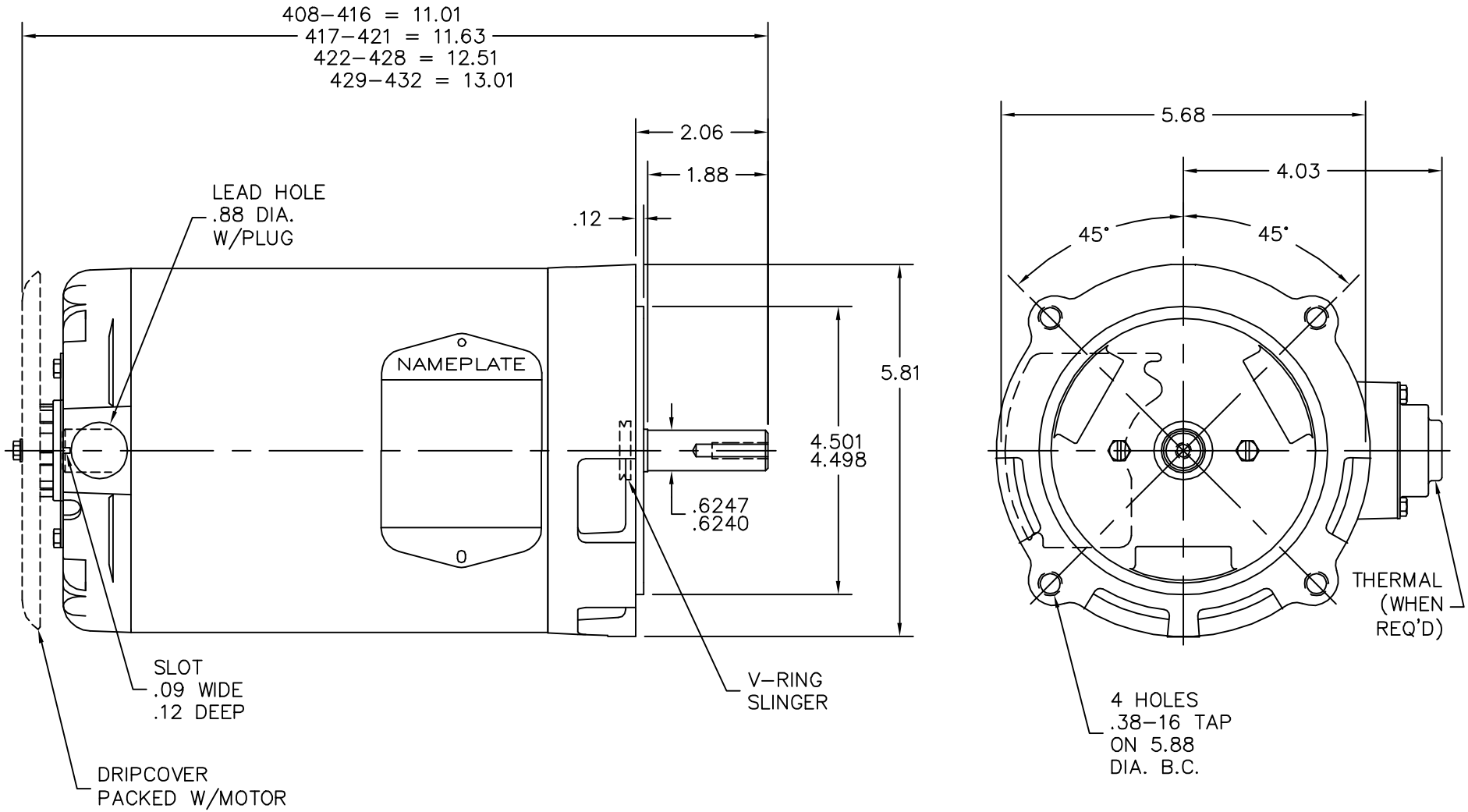

34LYL031

CUSTOMER IS RESPONSIBLE FOR DETERMINING THAT BALDOR'S PRODUCT WILL PERFORM SUITABLY IN THE INTENDED APPLICATION.

REV. DESC: UPDATE PARTS, ADD/FIX DIMS & STANDARIZE DESC.		
REV. LTR: D	VERSION: 02	TDR: 000000937572
FILE: \AAA\00050\348	REVISED: 02:05:02 08/04/2015	BY: ENMAIY0
MTL: –		

BALDOR

VERT 34M NEMA 56CZ OPEN W/TERM PLATE

SH 1 of 1