ITEM: WH-AZ01-180-NGI
WH-AZ02-199-NGI
WH-AZ03-180-LPI
WH-AZ04-199-LPI

ANZZI GAS TANKLESS WATER HEATER
(For indoor use only)
INSTALLATION & OPERATION MANUAL

V1.1
08/15/2026

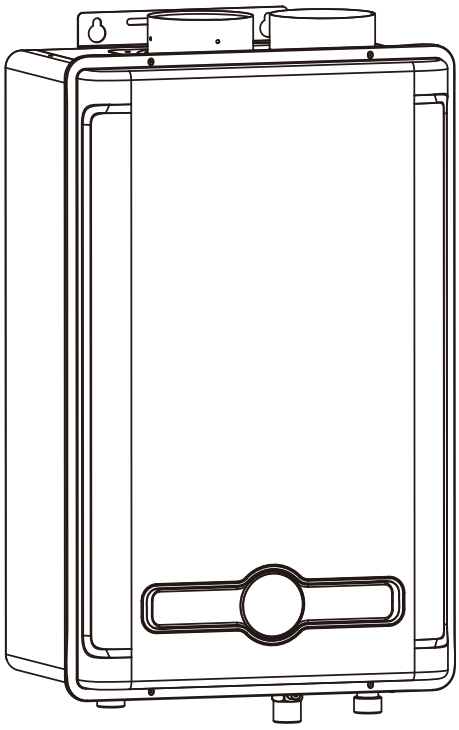

WH-AZ01-180-NGI
WH-AZ03-180-LPI

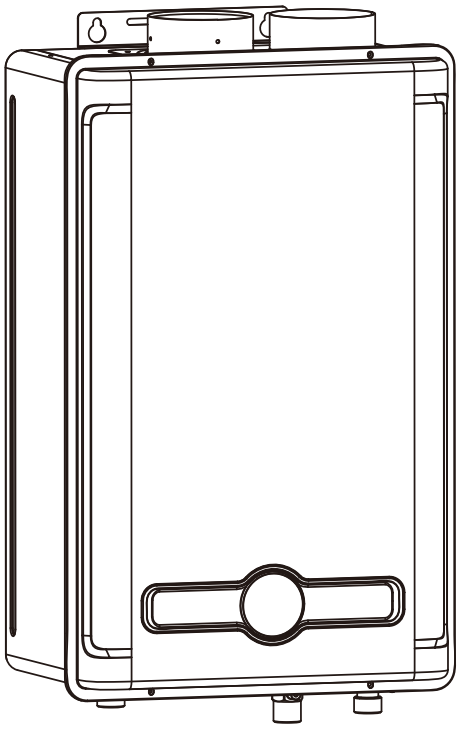

WH-AZ02-199-NGI
WH-AZ04-199-LPI

DON'T WAIT! REGISTER NOW!

Register your product within 90 days to ensure your purchase is recognized and eligible for warranty coverage.

Register online at https://anzzi.com/pages/register or scan the QR code on PG. 2.

ANZZI®

PRODUCT REGISTRATION*

IMPORTANT: Warranty will not be recognized unless product is registered.

Register online at https://anzzi.com/pages/register or Scan the QR code below.
Registering your product maximizes your warranty benefits and ensures prompt service and support.

1

USE YOUR PHONE CAMERA TO SCAN THE QR CODE

2

FILL IN A QUICK REGISTRATION FORM

3

CLICK SUBMIT AND ENJOY PEACE OF MIND

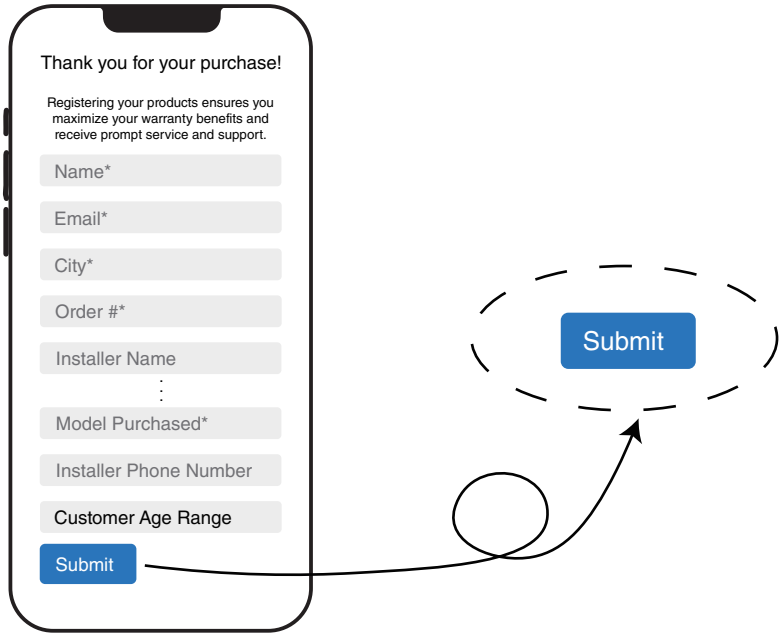

Need help? For technical support call **305-363-4679** or visit us at **www.ANZZI.com**

WARNING: If the information in these instructions is not followed exactly, a fire or explosion may result, causing property damage, personal injury, or death.

FOR YOUR SAFETY!

- Do not store or use gasoline or other flammable vapors and liquids in the vicinity of this or any other appliance. To do so may result in an explosion or fire.
- Installation and service must be performed by a qualified installer, service agency, or the gas supplier.

WHAT TO DO IF YOU SMELL GAS

- Do not try to light any appliance.
- Do not touch any electric switch; do not use any phone in your building.
- Immediately call your gas supplier from a neighbor's phone. Follow the gas supplier's instructions.
- If you cannot reach your gas supplier, call the fire department.
- Do not return to your home until authorized by the gas supplier or fire department.

Thank you for purchasing ENVO GAS TANKLESS WATER HEATER. Please read and follow the installation and operation instructions carefully, to ensure the long life and reliable operation of this appliance. FAILURE TO DO SO COULD CAUSE PROPERTY DAMAGE, SERIOUS INJURY, OR DEATH. **Please keep this manual for future reference.** This booklet includes useful information about the product, maintenance requirements and the details of your product warranty.

Installation should only be completed by licensed professionals. The use of professionals ensures the installation is in full compliance with all required building, plumbing and electrical codes.

TABLE OF CONTENTS

PRODUCT SIZE CHART 5
PRODUCT INFORMATION 7
COMPONENTS 8
TOOLS AND MATERIALS 8
SAFETY PRECAUTIONS 9
SPECIFICATIONS 14
INSTALLATION GUIDELINES 14
INSTALLATION REQUIREMENTS 15
LOCATION 15
Water Quality 16
Environment 16
INSTALLATION 18
REMOVE CURRENT WATER HEATER 18
CLEARANCES 18
INSTALLATION LOCATION CHECKLIST 19
INSTALLATION STEPS - Securing Water Heater 19
INSTALLATION STEPS - Venting 20
INSTALLATION STEPS - Connect Water Supply 26
INSTALLATION STEPS - Pressure Relief Valve 27
INSTALLATION STEPS - Connect Gas Supply 28
INSTALLATION STEPS - Connect Power Supply 29
Final Checklist 30
OPERATION INSTRUCTIONS 31
How to operate the Water Heater 32
LONG-TERM SHUTDOWN PRECAUTIONS AND FREEZE PROTECTION 34
MAINTENANCE AND INSPECTION 36
TROUBLESHOOTING 38
WIRING DIAGRAMS 41
REPLACEMENT PARTS 42

PRODUCT SIZE CHART

WH-AZ01-180-NGI
WH-AZ03-180-LPI

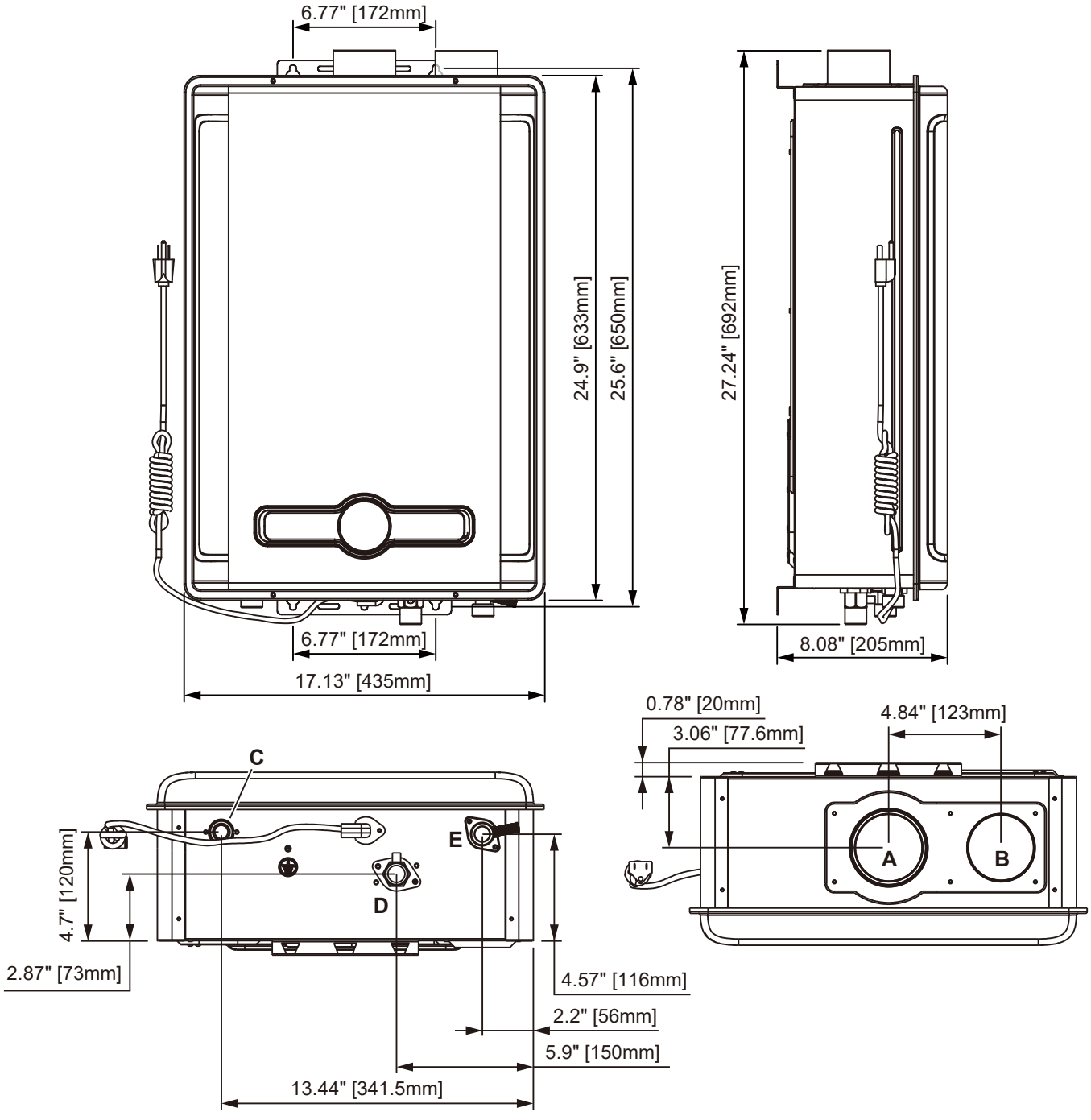

	Description	Diameter
A	Exhaust Outlet Pipe	3" [76mm]
B	Air Intake	3" [76mm]
C	Outlet	3/4"
D	Gas Inlet	3/4"
E	Inlet	3/4"

PRODUCT SIZE CHART

WH-AZ02-199-NGI
WH-AZ04-199-LPI

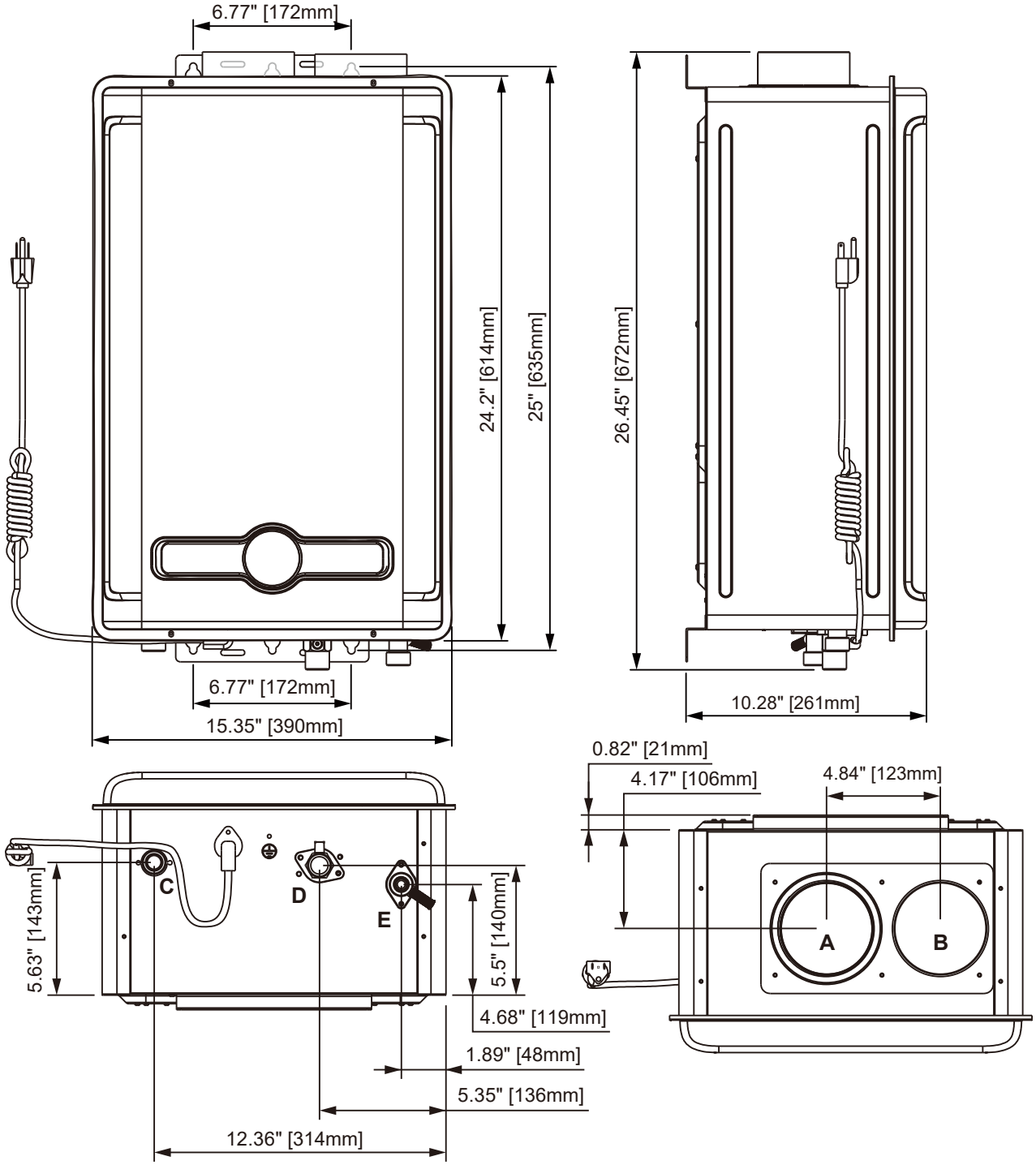

	Description	Diameter
A	Exhaust Outlet Pipe	4" [100mm]
B	Air Intake	4" [100mm]
C	Outlet	3/4"
D	Gas Inlet	3/4"
E	Inlet	3/4"

PRODUCT INFORMATION

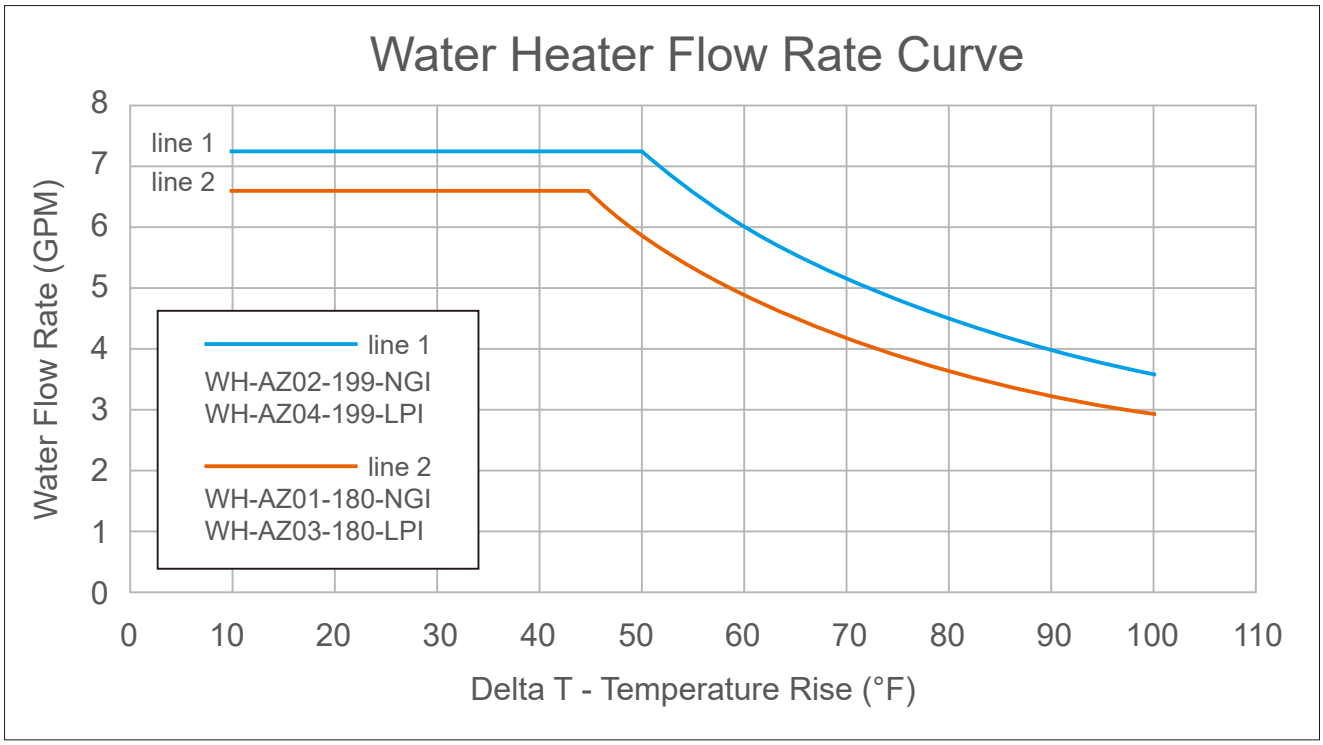

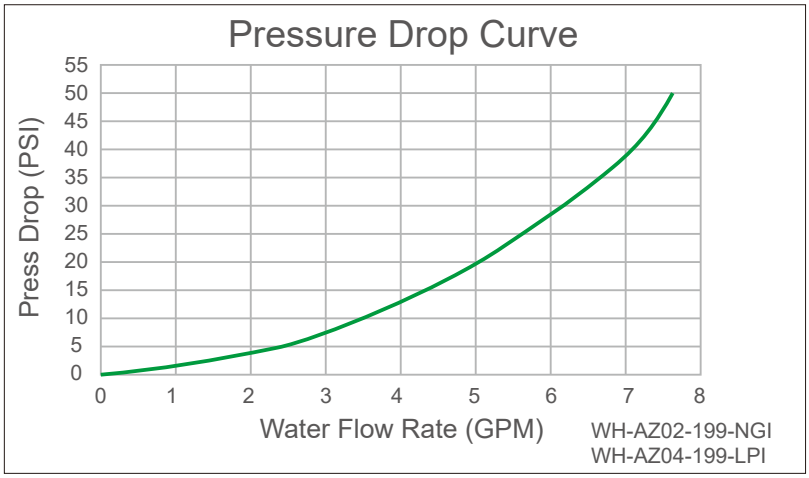

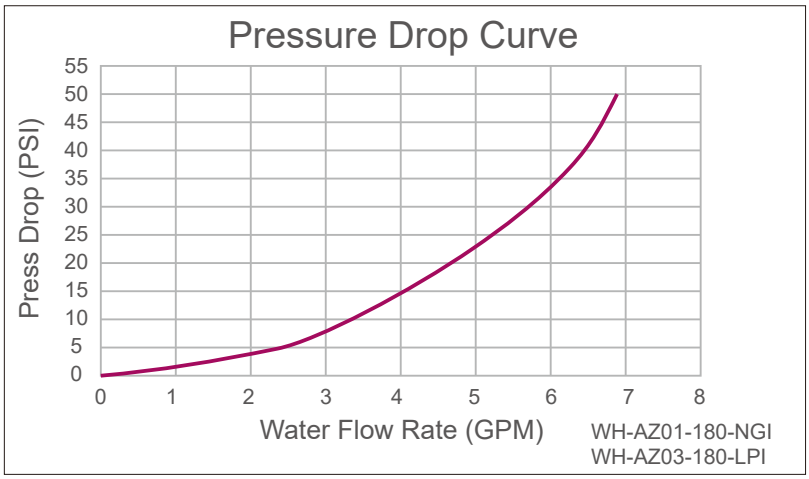

COMPONENTS

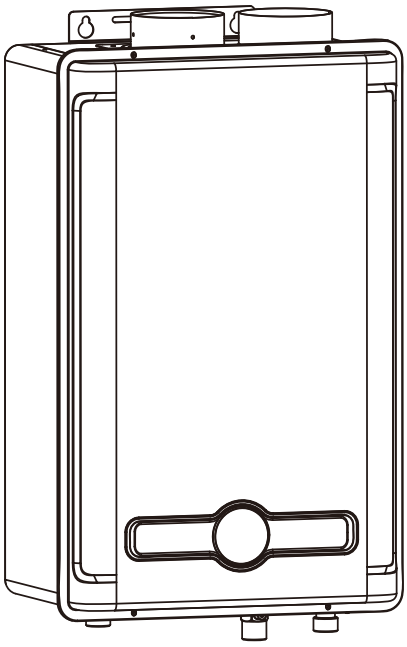

[01]



[02]



[03]



[04]



[05]



[06]

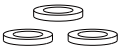

[07]

PART	Description	Qty.
01	Water Heater	1
02	Manual	1
03	Expanding Anchors	3
04	Screws (#8 x 0.78")	3
05	Anchors	3
06	Screws (#10 x 0.98")	4
07	Washers	3

⚠ CAUTION

Any claims for damage or missing parts/components must be filed immediately against the transportation company by the consignee.

TOOLS AND MATERIALS

TOOLS

- Adjustable Wrench
- Adjustable Pliers
- Pipe Wrench
- Screwdrivers
- Drill
- 3/8"Drill Bit (for concrete)
- Gloves
- Safety Glasses
- Bucket
- Tape Measure
- Marker Pen

MATERIALS

- Sealant Tape
- Soap or gas leak detector solution
- Approved venting(not provided)
- Pressure relief valve(not provided)
- Service valve(not provided)

SAFETY PRECAUTIONS

Safety Definitions

⚠ This is the safety alert symbol. This symbol alerts you to potential hazards that can kill or hurt you and others.

⚠ DANGER Indicates an imminently hazardous situation which, if not avoided, will result in death or serious injury.

⚠ WARNING Indicates a potentially hazardous situation which, if not avoided, could result in death or serious injury.

⚠ CAUTION Indicates a potentially hazardous situation which, if not avoided, could result in minor or moderate injury. It may also be used to alert against unsafe practices.

⚠ DANGER - Natural Gas and Liquefied Petroleum Safety

- DO NOT use a fuel gas that is not listed on the nameplate as compatible with the water heater. Abnormal combustion or a deflagration may occur which can cause a serious accident.

- Never attempt to convert the water heater from one gas type to another. The water heater should only use the fuel type in accordance with listing on name plate — natural gas for natural gas units and LP for LP units. Any other fuel usage will result in death or serious personal injury from fire and/or explosion. This water heater is not certified for any other fuel type.

- Both natural gas and propane (LP) have an odorant added to aid in detecting a gas leak. Some people may not physically be able to smell or recognize this odorant. If you are unsure or unfamiliar with the smell of natural gas or LP, ask the gas supplier. Other conditions, such as "odorant fade", which causes the odorant to diminish in intensity, can also hide or camouflage a gas leak.

- Water heaters using LP gas are different from natural gas models. A natural gas water heater will not function safely on LP and vice versa.

- LP water heaters should not be installed below grade (for example, in a basement) if such installation is prohibited by federal, state, and/or local laws, rules, regulations, or customs.

- LP must be used with great caution. It is heavier than air and will collect first in lower areas, making it hard to detect at nose level.

- Before attempting to light the water heater, make sure to look and smell for gas leaks. Use a soapy solution to check all gas fittings and connections. Bubbling at a connection indicates a leak that must be corrected. When smelling to detect a gas leak, be sure to also sniff near the floor.

- Gas detectors are recommended in LP and natural gas applications and their installation should be in accordance with the detector manufacturer's recommendations and/or local laws, rules, regulations, or customs.

- Combustible materials, such as clothing, cleaning materials, or flammable liquids, must not be placed in the vicinity of the water heater.

- If a gas leak is present or suspected:
  – DO NOT attempt to find the cause yourself.
  – Never use an open flame to test for gas leaks. The gas can ignite resulting in death, personal injury, or property damage.
  – Follow the steps listed under "What to Do If You Smell Gas" found on page 3 of this manual.

SAFETY PRECAUTIONS

⚠ DANGER - Venting Safety

- Failure to install and properly vent the water heater to the outdoors as outlined in the "INSTALLATION STEPS - Venting" section of the Installation Instructions in this manual will result in death from fire, explosion, or asphyxiation from carbon monoxide. NEVER operate this water heater unless it is properly vented and has an adequate air supply for proper operation.
- Do not install the water heater into a common vent with any other appliance. This will cause flue gas spillage or appliance malfunction, resulting in possible substantial property damage, severe personal injury, or death.
- Be sure to inspect the vent terminal, the air intake, and the vent system on the water heater for proper installation at initial start-up and at least annually thereafter.
- DO NOT use the unit if the vent piping has been damaged or altered in any way including cracking, separation, rusting, melting, etc. Improper venting may cause a buildup of Carbon Monoxide (CO) which can cause brain damage or death.
- Failure to perform the recommended Routine Preventive Maintenance can cause improper operation of this water heater, which can cause carbon monoxide dangers, excessive hot water temperatures, and other potentially hazardous conditions.

⚠ DANGER - Electrical Safety

To ensure safety, turn off electrical power supply at service entrance panel before making any electrical connections, or performing service or maintenance, to avoid possible electric shock hazard. Failure to do so could result in property damage, serious personal injury, or death.

⚠ DANGER - Water Supply Safety

- WATER TEMPERATURE SETTINGS – Safety and energy conservation are factors to be considered when selecting the water temperature setting. Water temperatures above 125°F (52°C) can cause death or severe burns from scalding. Pay attention to the Danger warnings on page 33.
- There is a hot water scald potential if the water temperature is set too high. Households with small children, the disabled, or elderly persons may require a 120°F (49°C) or lower temperature setting to prevent contact with "HOT" water.
- Before manually operating the relief valve, make certain no one will be exposed to the danger of the hot water released by the valve. The water may be hot enough to create a scald hazard. The water should be released into a suitable drain to prevent injury or property damage.

⚠ WARNING - Natural Gas and Liquefied Petroleum Safety

- The installation of gas piping must conform to local utility company requirements and/or in the absence of local codes, use the latest edition of National Fuel Gas Code (NFGC), ANSI Z223.1/NFPA 54, or CAN/CSA B149.1, Natural Gas and Propane Installation Code.
- Should overheating occur or the gas supply fail to shut off, turn off the manual gas control valve to the water heater.
- If inlet gas pressure is out of allowable range [3.5" w.c (0.87 kPa) – 10.5" w.c (2.61 kPa)] for Natural Gas, or [8.0" w.c (1.99kPa) – 13.0" w.c (3.23kPa)] for LP gas, a gas pressure regulator must be installed to maintain the allowable inlet gas pressure.

SAFETY PRECAUTIONS

⚠ WARNING - Venting Safety

- Use tankless water heater manufacturer approved Stainless Steel vent material only. No other vent material is permitted.
- Follow vent manufacturer's instructions for venting installation, including additional clearances from combustibles, to avoid conditions that can lead to death, personal injury, and/or property damage.
- Moisture in the flue gas will condense as it leaves the vent terminal. In cold weather this condensate can freeze on the exterior wall, under the eaves, and on surrounding objects. Some discoloration to the exterior of the building is to be expected. However, improper location or installation can result in severe damage to the structure or exterior finish of the building.
- This equipment should not be operated without the vent pipe properly connected. The exhaust pipe must not terminate in an area where the exhausting vapor or collecting condensate could create a hazardous situation or cause property damage. Exhaust gases must be vented out of the building in compliance with all building codes.
- For multiple-unit installation, a minimum distance between vent terminations must be maintained to prevent recirculation of vent gases. Ask qualified personnel for advice.

⚠ WARNING - Electrical Safety

- For your safety, the information in this manual must be followed to minimize the risk of fire, explosion, or electric shock that can result in death, personal injury, and/or property damage.
- This appliance is equipped with a three-prong grounded plug for increased protection against electrical shock. Ensure the plug is properly inserted into a clean, dry outlet that complies with all electrical codes. Only insert and remove the plug using the plug head and never use a wet hand to plug or unplug the power plug.
- Do not use an extension cord or an adapter plug with this appliance.
- Field wiring connections and electrical grounding must comply with local codes or, in the absence of local codes, with the latest edition of the National Electrical Code, ANSI/NFPA 70, or in Canada, Canadian Electrical Code, CAN/CSA C22.1, Part 1.
- A 120 V / 60 Hz power source should be used. Fire, electrical shock or damage to the water heater may occur if an incorrect power supply is used.

⚠ WARNING - Water Supply Safety

- **IMPORTANT**: DO NOT apply heat to the HOT or COLD water connections. If sweat connections are used, sweat tubing to adapter before fitting adapter to the water connections on heater. Any heat applied to the water supply fittings will permanently damage the internal components of the water heater.
- Failure to drain the water heater as described on "LONG-TERM SHUTDOWN PRECAUTIONS AND FREEZE PROTECTION" can cause serious personal injuries from scalding and/or damage the water heater.
- In case the pipe insulation is not rated for the appropriate weather conditions, install electric heat tracing or equivalent to prevent freezing of the pipes. DO NOT insulate or block the drain valve on the hot outlet fitting. If the pipes are allowed to freeze, the water heater and the pipes may malfunction or leak due to freezing water.

SAFETY PRECAUTIONS

⚠ WARNING - General Safety

- Gasoline and other flammable liquids, materials, and vapors (including paint thinners, solvents, and adhesives) are extremely dangerous. **DO NOT** handle, use, or store gasoline or other flammable or combustible materials anywhere in the vicinity of a water heater or any other appliance. Be sure to read and follow the labels on the water heater, as well as the warnings printed in this manual. Failure to do so can result in death, bodily injury, or property damage.

- Combustible construction refers to adjacent walls and ceilings and should not be confused with combustible or flammable products and materials. Combustible materials, such as clothing, cleaning materials, or flammable liquids, should never be stored in the vicinity of this or any gas appliance. Fire or explosion can occur causing death, personal injury, and/or product damage. See page 18 for clearances to combustible materials.

- Any alterations to the appliance will void the warranty.

- Do not use substitute materials. Use only parts certified for the appliance.

- If the water heater needs to be installed, moved, or serviced, only utilize licensed professionals. The use of professionals ensures all work is in full compliance with required building, plumbing and electrical codes.

- This heater is designed only for the heating of water and should not be used for other applications or used to heat any other liquid or substance.

- This water heater is designed for indoor mounting. Never mount it outdoors.

- This equipment should be installed in an area where water leakage from the unit or connections will not result in damage. The manufacturer is not responsible for any damages resulting from leaks.

- Do not install in areas that are subject to vibration.

- Freezing temperatures will cause damage to the heater. Install in locations where freezing temperatures are not reached and follow procedures to drain the unit if it will be out of service for a period of time.

- Only connect gas and water as instructed. Incorrect or reversed connections will cause equipment damage.

- Do not over tighten connections or equipment may be damaged.

- To protect yourself from harm, before performing maintenance:
  a. Turn off the electrical power supply by unplugging the power cord or by turning off the electricity at the circuit breaker. (The temperature controller does not control the electrical power.)

  b. Turn off the gas at the manual gas valve, usually located immediately below the water heater.

  c. Turn off the incoming water supply. This can be done at the isolation valve immediately below the water heater or by turning off the water supply to the building.

- Before operating, smell all around the appliance area for gas. Be sure to smell next to the floor because some gas is heavier than air and will settle on the floor.

- The exhaust piping is very hot during and for a period after use. Do not touch the pipe.

- Do not use this appliance if any part has been under water. Consult a qualified service technician to inspect the appliance and make any required repairs prior to installation and operation.

- Ensure that snow, ice or other debris does not block the inlet or exhaust pipes.

- Regular housekeeping should be done in areas around the heaters to prevent insect intrusion and possible equipment malfunction. Perform routine service on a regular basis to ensure optimum performance. Service needs will vary based on local water conditions including acidity, alkalinity, hardness, etc.

- Verify proper operation after servicing.

SAFETY PRECAUTIONS

⚠ CAUTION - Natural Gas and Liquefied Petroleum Safety

- DO NOT attempt repair of electrical wiring, gas piping, remote control, burners, vent connectors, or other safety devices. Refer repairs to qualified service personnel.
- DO NOT turn on the water heater unless the water and gas supplies are completely opened.
- Turn off the manual gas shut-off valve if the water heater has been subjected to overheating, fire, flood, physical damage, or if the gas supply fails to shut off.

⚠ CAUTION - Venting Safety

- Ensure that the vent pipe is securely attached to the water heater.
- Condensate must drain away from the water heater and should not be allowed to drain back into any part of the vent system.
- Hot exhaust and vent may cause serious burns. Keep away from the water heater unit. Keep small children and animals away from the unit.

⚠ CAUTION - Water Supply Safety

- This water heater must only be used with the following water supply system conditions:
  – With clean, potable water free of corrosive chemicals, sand, dirt, or other contaminants.
  – With inlet water temperatures above 32°F (0°C), but not exceeding 120°F (49°C).
  – DO NOT reverse the hot and cold water connections.The water heater will not operate.
- When using hot water for a shower or bath always check the water temperature before entry to avoid being scalded. Obey local codes for the maximum water temperature setting allowed. Water temperatures over 125°F(52°C) can cause severe burns or death from scalds. Households with small children, disabled or elderly persons may require a setting of 120°F(49°C) or lower.
- Hot water outlet pipes leaving the unit can be hot to touch. In residential applications, insulation must be used for hot water pipes below 36" due to burn risk to children.
- Do not use this water heater for space heating applications.
- Even when drained properly, a small amount of water will remain in the water heater. In cold weather conditions, this water can freeze. If this happens, allow the defrost protection on the heater at least 30 minutes to melt the frozen water or the water heater may not work properly.
- For your safety, burner inspection and cleaning should be performed only by qualified service personnel.

SPECIFICATIONS

		WH-AZ01-180-NGI	WH-AZ02-199-NGI	WH-AZ03-180-LPI	WH-AZ04-199-LPI
Minimum Gas Consumption Btu/h		20,000	27,000	20,000	27,000
Maximum Gas Consumption Btu/h		180,000	199,000	180,000	199,000
Flow Rate (45°F Temp. Rise)		6.8 GPM (26 L/min)	8.0 GPM (30 L/min)	6.8 GPM (26 L/min)	8.0 GPM (30 L/min)
Temperature Range		95°F - 140°F (35°C - 60°C)			
Min. Activation Rate		0.67 gpm (2.5 L/min)			
Type of Gas		Natural Gas	Natural Gas	Propane	Propane
Gas Supply Pressure		3.5" w.c - 10.5" w.c	3.5" w.c - 10.5" w.c	8.0" w.c - 13.0" w.c	8.0" w.c - 13.0" w.c
Electrical Data	Normal	48 W	52 W	48 W	52 W
	Standby	2 W			
	Anti-frost protection	120 W			
	Max Current	2.4A			
	Fuse	5A			
Electric Connections		AC 120Volts, 60Hz			
Type of Appliance		Direct Vent Automatic Instantaneous Water Heater			
Ignition System		Direct Electronic Ignition			
Connections		Gas Supply: 3/4" NPT, Cold Water Inlet: 3/4" NPT, Hot Water Outlet: 3/4" NPT			
Max. Water Pressure		145 PSI (1000 kPa)			
Certified for installation in manufactured (mobile) homes		Yes			
Weight		44.09 lbs	50.71 lbs	44.09 lbs	50.71 lbs
Dimension(H x W x D)		27.24 x 17.13 x 8.08 inches	26.45 x 15.35 x 10.28 inches	27.24 x 17.13 x 8.08 inches	26.45 x 15.35 x 10.28 inches

1. The maximum inlet gas pressure must not exceed the value specified by the manufacturer. The minimum value listed is for the purpose of input adjustment.
2. Our products are continually being updated and improved; therefore, specifications are subject to change without prior notice.

INSTALLATION GUIDELINES

- Only properly qualified personnel should install this equipment. Improper installation or installation by a non-qualified installer may void warranty. Failure to comply with state and local codes pertaining to water heater installations may also void warranty.

- The installer should have skills such as:
  - gas sizing
  - connecting gas lines, water lines, valves, electricity.
  - knowledge of applicable national, state, and local codes.
  - installing venting through a wall or roof.
  - training in installation of tankless water heaters.

- Water heaters are suitable for installation as a single stand unit or in installations involving combinations of multiple units (i.e. parallel or series). These guidelines are for the installation of a single unit. Please contact ANZZI for multiple device connection assistance.

- The appliance and its gas connection must be leak tested before placing the appliance in operation. A qualified installer or service technician should inspect the system before use. The installation must comply with local codes. In the absence of local codes the National Fuel Gas Code, ANSI Z223.1/NFPA 54, or the Natural Gas and Propane Installation Code, CSA B149.1 shall prevail. If installed in a manufactured home, the installation must confirm with the Manufactured Home Construction and Safety Standard, Title 24 CFR, Part 3280 or the Canadian standard CSA Z240 MH Series, Manufactured Homes.

INSTALLATION GUIDELINES

- This appliance should NOT be installed outdoors.
- The appliance must be electrically grounded in accordance with local codes. In the event there are no local codes, the National Electrical Code, ANSI/NFPA 70, or the Canadian Electrical Code, CSA C22.1 shall prevail.
- The appliance must be isolated from the gas supply piping system by closing its individual manual shut off valve during any pressure testing of the gas supply piping system at test pressures equal to or less than 1/2 psi (3.5 kPa).
- The gas pressure will be between 3.5" wc (0.87 kPa) - 10.5" wc (2.61 kPa) for natural gas and 8.0" wc (1.99 kPa) - 13.0" wc (3.23 kPa) for liquid propane.
- The appliance should be located in an area where leakage of the heat exchanger or connections will not result in damage to the area adjacent to the appliance or to lower floors of the structure. When such locations cannot be avoided, it is recommended that a suitable drain pan, adequately drained, be installed under the appliance. The pan must not restrict combustion air flow.
- Do not obstruct the combustion air intake or heater exhaust and ensure air intake is not near an area that will allow chemical fumes to enter the combustion air system. These fumes can damage components and reduce the life of your appliance.
- Do not use this appliance in an application such as a pool or spa heater that uses chemically treated water. (This appliance is suitable for filling large or whirlpool spa tubs with potable water.)
- If a water heater is installed in a closed water supply system, such as one having a backflow preventer in the cold water supply line, a means to control thermal expansion must be included. Contact the water supplier or local plumbing inspector on how address this.
- Do not use substitute parts that are not authorized for this appliance.
- For your safety, DO NOT attempt to disassemble this water heater for any reason. Improper adjustments, alterations, service, or maintenance can cause death, personal injury, or property damage.
- Read this manual entirely before installing and/or operating the water heater. Use this water heater only for its intended purpose as described in this manual.
- You must follow the installation instructions and those in Care and Maintenance for adequate combustion air intake and exhaust.

INSTALLATION REQUIREMENTS

LOCATION

Take the following guidelines into account when choosing an installation location for this unit.

- Unit must be installed indoors. Installation is not recommended in bathrooms, bedrooms or occupied rooms that are normally kept closed.
- Unit should have proper clearance as indicated on page 18 including ample clearance in front of unit for proper service access.
- Installation is recommended to be at a height that will allow easy viewing and operation of the control panel.
- Heater requires a standard three prong, 120 V /60 Hz grounded AC power outlet within 3 feet of installation location.
- Heater requires a 3/4" gas supply line.
- Ventilation requirements must be considered when choosing installation location. Minimizing vent piping will reduce installation costs and maximize efficiency.

INSTALLATION REQUIREMENTS

LOCATION

Take the following guidelines into account when choosing an installation location for this unit.

Water Quality

- The water used by this water heater must be potable, free of corrosive chemicals, sand, dirt, or other contaminates. It is up to the installer to ensure the water does not contain corrosive chemicals, or elements that can affect or damage the heat exchanger. Water that contains chemicals exceeding the levels listed at right will affect and damage the heat exchanger.

- If you install this water heater in an area that is known to have hard water or water that causes scale build-up, the water must be treated and/or the heat exchanger flushed regularly. When scale build-up in the heat exchanger begins to affect the performance of the water heater, flush the heat exchanger to prevent damage to it. Scale build-up is caused by hard water set at a high temperature.

- Potable water is defined as drinkable water supplied from utility or well water in compliance with EPA secondary maximum contaminant levels (40 CFR Part 143.3) as shown in the table below.

	Maximum Level
Total Hardness	Up to 200 mg / L
Aluminum	Up to 0.2 mg / L
Chloride	Up to 250 mg / L
Manganese	Up to 0.05 mg / L
pH	6.5-8.5
Sulfate	Up to 250 mg / L
Total dissolved solids (TDS)	Up to 500 mg / L
Zinc	Up to 5 mg / L

Replacement of the heat exchanger due to water quality damage is not covered by the warranty.

Environment

- Air surrounding the water heater, venting, and vent termination(s) is used for combustion and must be free of any compounds that cause corrosion of internal components. These include corrosive compounds that are found in aerosol sprays, detergents, bleaches, cleaning solvents, oil based paints/ varnishes, and refrigerants. The air in beauty shops, dry cleaning stores, photo processing labs, and storage areas for pool supplies often contains these compounds.

- This water heater must be installed as described in this manual: upright, with the vent adapters in the vertical position. DO NOT attempt to install this water heater in any other orientation. Doing so will result in improper water heater operation and property damage, and could result in serious personal injury or death.

- Identify a suitable location per the "Location and Clearance Guidelines". Ensure that the heater will be attached in a manner that is sufficient to support the weight of the heater in operation.

- **IMPORTANT CONSIDERATIONS FOR:**
  Indoor Water Heaters
  - DO NOT Install in areas where air for combustion can be contaminated with chemicals.
  - Before installation, consider whether contaminated air has the ability to travel within the building to the water heater.
  - Where possible, install the water heater in a sealed closet so that it is protected from the potential of contaminated indoor air.
  - Chemicals that are corrosive in nature should not be stored or used near the water heater.
  - Ensure ambient temperatures are higher than 32°F(0°C) and lower than 120°F(49°C).
  - Avoid continuously high levels of humidity.
  - Never close existing ventilation openings.

- **Damage and repair due to corrosive compounds in the air is not covered by warranty.**

INSTALLATION REQUIREMENTS

LOCATION

Take the following guidelines into account when choosing an installation location for this unit.

⚠ WARNING

- Fire Hazard – Combustible construction refers to adjacent walls and ceilings and should not be confused with combustible or flammable products and materials. Combustible materials, such as clothing, cleaning materials, or flammable liquids, must not be placed against or next to the water heater. Fire or explosion could occur causing death, personal injury, and/or product damage.

- Make sure the user knows the location of the gas shut-off valve and how to operate it. Immediately close the gas shut-off valve if the water heater is subjected to fire, overheating, flood, physical damage, or any other damaging condition that might affect the operation of the unit. Have the water heater checked by a qualified technician before resuming operation.

- A gas-fired water heater should never be installed in a space or room where liquids with flammable vapors are used or stored. Such liquids include gasoline, LP gas (butane or propane), paint, adhesives and their thinners, solvents, or removers. Flammable vapors carry long distances from where they are used or stored. The open flame of the water heater's main burner can ignite these vapors causing an explosion or fire.

- Do not obstruct the flow of combustion and ventilating air. Adequate air must be provided for safe operation. Failure to keep the exhaust vent and intake pipe clear of ice, snow, or other debris could result in property damage, serious personal injury, or death.

⚠ CAUTION

- The following requirements will ensure a safe installation:
  - The water heater must be located in an area where it won't sustain damage from moving vehicles, flooding, etc. If the water heater is installed in a storage garage, the direct ignition system and main burner should be no less than 18 in. (45 cm) above the garage floor.

  - If the water heater is installed in a repair garage or in a private garage, the direct ignition system and main burner should be no less than 4.5 ft. (140 cm) above the garage floor.

  - The water heater should be installed as close as possible to the vent termination. This minimizes the vent length and the number of elbows and joints required for venting.

- To conserve water and energy, insulate all water piping, especially the hot and recirculation water lines.

- In order for the condensate to properly flow out of the collection system, the water heater must be installed level.

- The service life of the water heater's exposed metallic surfaces, such as the cabinet, as well as internal surfaces, such as the heat exchanger, are directly influenced by proximity to damp and salty marine environments. In such areas, higher concentration levels of chlorides from sea spray coupled with relative humidity can lead to degradation of the heat exchanger and other water heater components. In these environments, water heaters must not be installed using direct vent systems which draw outdoor air for combustion. Such water heaters must be installed using room air for combustion. Indoor air will have a much lower relative humidity and, hence, potential corrosion will be minimized.

INSTALLATION

REMOVE CURRENT WATER HEATER

Make sure to follow the steps below to remove the existing water.

1. Seal any unused openings in the common venting system.
2. Visually inspect the venting system for proper size and horizontal pitch to determine if there is blockage, leakage, corrosion or other deficiencies that could cause an unsafe condition.
3. If practical, close all building doors, windows and all doors between the common venting system and other spaces in the building. Turn on clothes dryers and any appliances not connected to the common venting system. Turn on any exhaust fans, such as range hoods and bathroom exhausts, at maximum speed. Do not operate a summer exhaust fan. Close all fireplace dampers.
4. Place the appliance being inspected in operation. Follow the lighting instructions. Adjust the thermostat so the appliance will operate continuously.
5. Test for spillage at the draft hood relief opening after 5 minutes of main burner operation. Use the flame of a match or candle or smoke from a cigarette.
6. After it has been determined that each appliance remaining connected to common venting system properly vents when tested as outlined, return doors, windows, exhaust fans, fireplace dampers and any other gas burning appliance to their previous condition of use.
7. Any improper operation of the common venting system should be corrected so the installation conforms to the National Fuel Gas Code, ANSI Z223.1. When resizing any portion of the common venting system, the common venting system should be resized to approach the minimum size as determined using the appropriate tables in Appendix G in the National Fuel Gas Code, ANSI Z 223.1.

⚠ WARNING

Breathing Hazard -Carbon Monoxide Gas



- Do not operate heater if flood damaged.
- Install vent system in accordance with local codes and manufacturer's installaton instructions.
- Do not obstruct heater air intake or exchaust. Support all vent piping per manufacturers installation instructions.
- Do not place chemical vapor emitting products near unit.
- According to NFPA 720, carbon monoxide detectors should be installed outside each sleeping area.
- Never operate the heater unless it is vented to the outdoors.
- Analyze the entire vent system to make sure that condensate will not become trapped in a section of vent pipe and therefore reduce the open cross sectional area of the vent.

⚠ **Breathing carbon monoxide can cause brain damage or death.**

CLEARANCES

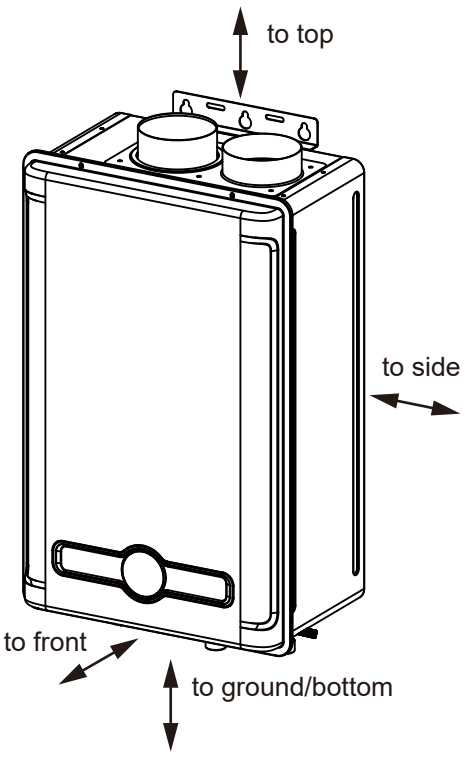

	to Combustibles	to Non-Combustibles
Top	12" [305mm]	10" [250mm]
Front	24" [600mm]	24" [600mm]
Rear	*	0
Left/Right Sides	6" [152mm]	4" [100mm]
Ground/Bottom	12" [305mm]	12" [305mm]

* 1 inch (25 mm) fireproof insulating panel required

⚠ CAUTION

If clearances are not met, damage to the property and water heater may occur.

INSTALLATION

INSTALLATION LOCATION CHECKLIST

- ☐ The water heater is not exposed to corrosive compounds in the air.
- ☐ The water heater location complies with the required clearances.
- ☐ The planned venting will not exceed the maximum length for the number of elbows used.
- ☐ The planned venting termination/air intake location meets the clearances.
- ☐ Indoor air is not being used for combustion.
- ☐ The water supply does not contain chemicals or exceed total hardness that will damage the heat exchanger.
- ☐ A standard 3 prong 120 V AC, 60 Hz properly grounded wall outlet is available.
- ☐ The installation must conform with local codes or, in the absence of local codes, with the National Fuel Gas Code, ANSI Z223.1/NFPA 54, or the Natural Gas and Propane Installation Code, CSA B149.1. If installed in a manufactured home, the installation must conform with the Manufactured Home Construction and Safety Standard, Title 24 CFR, Part 3280 and/or CAN/SCA Z240 MH Series, Mobile Homes.

INSTALLATION STEPS - Securing Water Heater

⚠ CAUTION

If the wall is not fireproof, the water heater should then be cushioned with a fireproof board, of which each rim projects beyond the corresponding rim of the water heater by 3.9" (100mm) and is 0.39" (10mm) off the wall.

Step 1

Attach and hold the **Water Heater [01]** to the intended position on the wall. Mark the screw holes on the wall as figure shows below. Then remove the water heater.

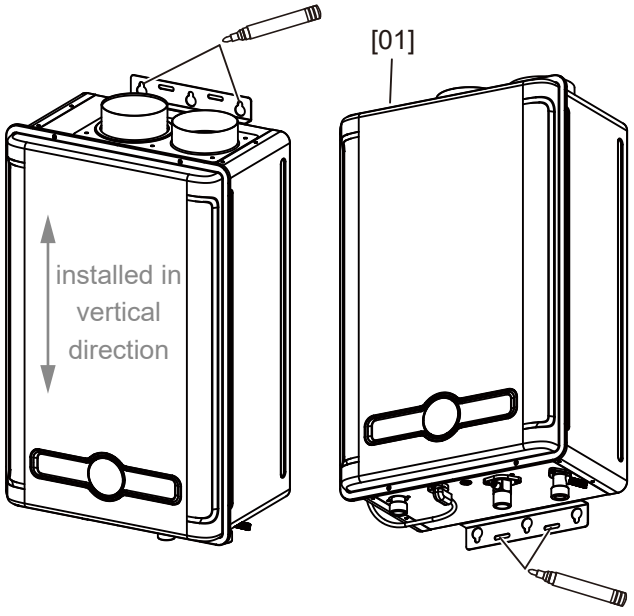

Step 2

For concrete walls, drill two 5/16" holes at the top and two 7/32" holes at the bottom. For wooden stud installation, please skip to Step 4.

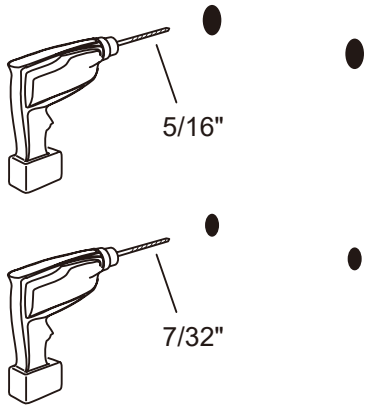

INSTALLATION

INSTALLATION STEPS - Securing Water Heater

Step 3

Loosen the **nut** of **Expanding Anchors [03]** and insert them into two holes at the top leaving 1/8" gap between the nut and the wall. Insert **Anchors [05]** into two holes at the bottom.

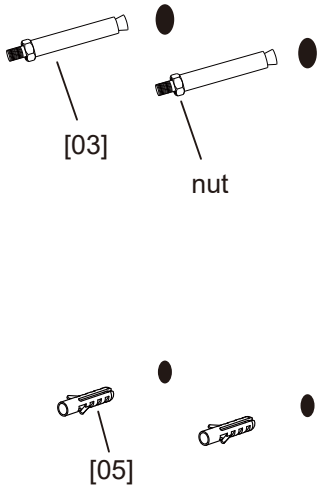

Step 4

Slide the bigger holes of **upper bracket** of **Water Heater [01]** on to the **Expanding Anchors [03],** slide down and tighten the **nuts** to secure. Install the **Screws [04]** through the holes of **lower bracket** at the bottom and tighten them to secure.

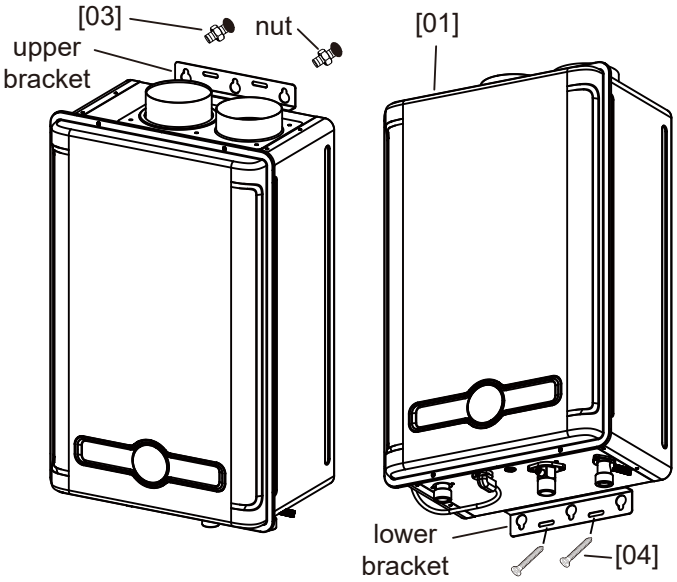

Note: Use **Screws [06]** for water heater installation on to wooden studs.



INSTALLATION STEPS - Venting

⚠ WARNING

- DO NOT use PVC, CPVC, ABS or galvanized material to vent this appliance.
  DO NOT combine vent components from different manufacturers.
  DO NOT reduce the vent diameter.
  DO NOT connect the venting system with an existing vent or chimney.
  DO NOT common vent with the vent pipe of any other manufacturer's water heater or appliance.
  DO NOT install water heaters at location higher than 6561 ft (2000m).

- Exhaust vent must be of AL 29-4C Stainless Steel.

- Improper venting of a water heater can result in excessive levels of Carbon Monoxide which can result in severe injury or death!

- The exhaust pipe must maintain adequate clearances and be insulated with a fireproof material if it passes through walls made of flammable materials. Consult local codes and vent pipe manufacture documentation for proper material selection and installation requirements.

- This water heater must be vented in accordance with the "Venting of Equipment" section of ANSI Z223.1 / NFPA 54 National Fuel Gas Code –latest versions, or in Canada, the most recent version of CAN/CGA B149.1. Natural Gas and Propane Installation Code. In addition, all installations must completely comply with all applicable local building codes. Failure to comply can result in equipment failure, fire, personal injury or death!

INSTALLATION

INSTALLATION STEPS - Venting

⚠ CAUTION

- This water heater is a direct vent water heater. You must use vent components that are certified and listed for this kind of water heater.
- Refer to the instructions of the vent system manufacturer for component assembly instructions.
- The vent system must vent directly to the outside of the building and use outside air for combustion. Ensure the incoming air is not contaminated by any potential source of fumes or chemicals.
- Venting should be as direct as possible with a minimum number of pipe fittings.
- The water heater vent must not be combined with the vent from any other gas appliance or vent stack.
- The water heater must not be connected to a chimney flue serving a separate appliance, designed to burn solid fuel.
- Do not combine use vent or vent connector from multiple manufacturers.
- For manufactured vent systems, vent connections must be firmly pressed together so that the connections form an air tight seal. Follow the venting manufacturer's instructions.
- A condensate collector is required for this system when there is a vertical vent configuration. A condensate collection point should be installed on the vertical run of piping just prior to the heater to ensure proper condensate drainage.
- Check with local codes for proper disposition and handling of condensate water, an air-gapped drain is usually required and in some cases a condensate neutralizer is also required.
- Avoid dips or sags in horizontal vent runs by installing supports per the vent manufacturer's instructions.
- Support horizontal vent runs every 4 ft(1.2 m) and all vertical vent runs every 6 ft (1.83 m) or as per vent manufacturer's instructions or local code requirements.
- Ensure the air intake and vent termination points are at least 12"(300mm) above maximum snow accumulation level. The air flow must not be impeded by snow or debris.
- Ensure the air intake and vent termination points are at least 24"(600mm) from any obstruction or other objects.
- If the vent system is to be enclosed, it is suggested that the design of the enclosure allows inspection of the vent system. The design of such enclosure should be approved by a trained and qualified professional or the local inspector.
- If reusing existing venting it should be inspected for damage and to ensure it is appropriate (approved) for this water heater. To ensure safe and proper operation, damaged vent components MUST be replaced before operating the water heater.
- If the heater will be installed in a building that has a system that maintains a negative pressure, it is possible for a back-draft to allow outside air to be pulled into the heater while not in operation. This can create a situation where freezing might occur within the heater. Please consult a professional for a properly designed venting solution.
- Do not store hazardous or combustible materials near the vent piping.
- Check to determine whether local codes supersede the following clearances:
  - Avoid termination locations near a dryer vent.
  - Install a vent termination at least 12 inches above the ground.
- Important considerations for locating vent termination under a soffit (ventilated or unventilated or eave vent; or to a deck or porch).
  - DO NOT install vent termination under a vented soffit that may result in exhaust gases entering the soffit vent.
  - Install vent termination so that exhaust and rising moisture will not collect under eaves. Discoloration to the exterior of the building could occur if installed too close.

INSTALLATION

INSTALLATION STEPS - Venting

⚠ CAUTION

- DO NOT install the vent termination too close under the soffit where it could cause recirculation of exhaust gases back into the combustion air intake part of the termination.

- Any issues resulting from improper vent installation will not be covered by warranty.

CHOOSE VENT PRODUCTS

Following is a list of vent components and terminations for vent installations. Install the correct venting for your model according to the venting manufacturer's instructions. The information below is correct at time of publication and is subject to change without notice. Contact the vent manufacturer for questions related to the vent system, products, part numbers and instructions.

ACCEPTABLE VENT MANUFACTURER:

Manufacturer	Telephone	Web Site
Z-Flex	USA: (603) 669-5136 or (800) 654-5600	www.z-flex.com
	CANADA: (416) 679-0045	

APPROVED Z-FLEX VENT PRODUCTS FOR HORIZONTAL VENTILATION:

Diagram	Part Number	Description	WH-AZ01-180-NGI WH-AZ03-180-LPI	WH-AZ02-199-NGI WH-AZ04-199-LPI
	2SVEPWC(F)0305	Pipe(3 in X 5 ft)	Y	
	2SVEPWC(F)0405	Pipe(3 in X 5 ft)		Y
	2SVEEWC(F)0345	Elbow(45° X 3 in)	Y	
	2SVEEWC(F)0445	Elbow(45° X 4 in)		Y
	2SVEEWC(F)0390	Elbow(90° X 3 in)	Y	
	2SVEEWC(F)0490	Elbow(90° X 4 in)		Y
	2SVSHTD03	Termination w/Damper 3 in	Y	
	2SVSHTD04	Termination w/Damper 4 in		Y
	2SVSTT(F,X)03	Termination Tee 3 in	Y	
	2SVSTT(F,X)04	Termination Tee 4 in		Y
	2SVEDWC(F)03	Drain Pipe Horizontal 3 in	Y	
	2SVEDWC(F)04	Drain Pipe Horizontal 4 in		Y
	2SVSNA03.5	Appliance Adaptor 3 in	Y	
	2SVSNA04.5	Appliance Adaptor 4 in		Y
	2SVWT03	4-7 Wall Thimble 3SW	Y	
	2SVWT04	4-7 Wall Thimble 4SW		Y

Note:

1. The thickness of the wall where the vent system is installed should not be less than 10".
2. Wall Thimble is for use when the vent passes through a horizontal opening. Not required for non-combustible walls.

INSTALLATION STEPS - Venting

CHOOSE VENT PRODUCTS

APPROVED Z-FLEX VENT PRODUCTS FOR VERTICAL VENTILATION:

Diagram	Part Number	Description	WH-AZ01-180-NGI WH-AZ03-180-LPI	WH-AZ02-199-NGI WH-AZ04-199-LPI
	2SVEPWC(F)0305	Pipe(3 in X 5 ft)	Y	
	2SVEPWC(F)0405	Pipe(3 in X 5 ft)		Y
	2SVEEWC(F)0345	Elbow(45° X 3 in)	Y	
	2SVEEWC(F)0445	Elbow(45° X 4 in)		Y
	2SVEEWC(F)0390	Elbow(90° X 3 in)	Y	
	2SVEEWC(F)0490	Elbow(90° X 4 in)		Y
	2SVSADJS(F)03	Flashing 30-45° 3SW	Y	
	2SVSADJS(F)04	Flashing 30-45° 4SW		Y
	2SVSLS(F,X)03	Storm Collar 3SW	Y	
	2SVSLS(F,X)04	Storm Collar 4SW		Y
	2SVSRC(F,X)03	Rain Cap w/wind band 3in	Y	
	2SVSRC(F,X)04	Rain Cap w/wind band 4in		Y
	2SVEVWC(F)03	Vertical Drain Tee w/Cap 3 in	Y	
	2SVEVWC(F)04	Vertical Drain Tee w/Cap 4 in		Y
	2SVSNA03.5	4-7 Wall Thimble 3SW	Y	
	2SVSNA04.5	4-7 Wall Thimble 4SW		Y
	2SVSTT(F,X)03	Termination Tee 3 in	Y	
	2SVSTT(F,X)04	Termination Tee 4 in		Y

INSTALLATION

INSTALLATION STEPS - Venting

Horizontal Vent Terminal Location for Direct-Vent Water Heater

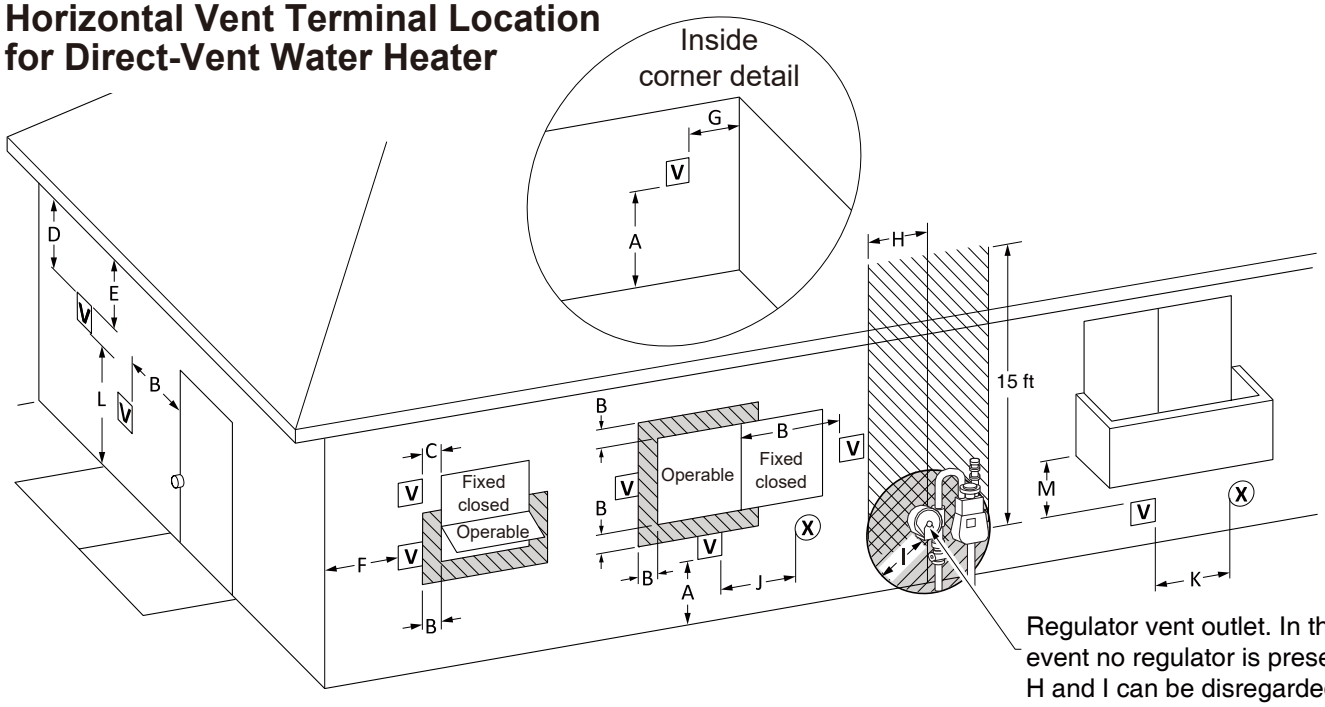

Regulator vent outlet. In the event no regulator is present, H and I can be disregarded.

V = VENT TERMINAL **(X) = AIR SUPPLY INLET** **= AREA WHERE TERMINAL IS NOT PERMITTED**

		Canadian Installations (CSA B149.1)	US Installations (ANSI Z223.1 / NFPA 54)
A	Clearance above grade, veranda, porch, deck or balcony	12 inches (30 cm)	12 inches (30 cm)
B	Clearance to window or door that may be opened	36 inches (91 cm)	12 inches (30 cm)
C	Clearance to permanently closed window	*	*
D	Vertical clearance to ventilated soffit located above the terminal within a horizontal distance of 2 ft (61 cm) from the center line of the terminal.	*	*
E	Clearance to unventilated soffit	*	*
F	Clearance to outside corner	*	*
G	Clearance to inside corner	*	*
H	Clearance to each side of center line extended above meter/regulator assembly	3 feet (91 cm) within a height of 15 feet (4.6 m)	*
I	Clearance to service regulator vent outlet	3 feet (91 cm)	*
J	Clearance to nonmechanical air supply inlet to building or the combustion air inlet to any other appliance	36 inches (91 cm)	12 inches (30 cm)
K	Clearance to a mechanical air supply inlet	6 feet (1.83 m)	3 feet (91 cm) above if within 10 feet (3 m) horizontally
L	Clearance above paved sidewalk or paved driveway located on public property	7 feet (2.13 m)+	*
M	Clearance under veranda, porch deck, or balcony	12 inches (30 cm)‡	*

* For clearances not specified in National Fuel Gas Code, ANSI Z223.1/NFPA 54, or the Natural Gas and Propane Installation Code, CSA B149.1, clearances are in accordance with local installation codes and the requirements of the gas supplier.

\+ A vent should not terminate directly above a sidewalk or paved driveway that is located between two single family dwellings and serves both dwellings.

‡ Permitted only if veranda, porch, deck, or balcony is fully open on a minimum of two sides beneath the floor. Clearance to opposite wall is 24 inches (60 cm).

INSTALLATION

INSTALLATION STEPS - Venting

Maximum Vent Length

1. Determine the number of 90 degree elbows in the vent system. (Two 45 degree elbows count as one 90 degree elbow.)

2. Refer to the table to find the maximum vent length based on the number of elbows.

Number of 90° Elbows	Vent Length	Number of 90° Elbows	Vent Length	Number of 90° Elbows	Vent Length	Number of 90° Elbows	Vent Length
0	41 ft (12.5 m)	2	29 ft (8.8 m)	4	17 ft (5.2 m)	6	5 ft (1.5 m)
1	35 ft (10.7 m)	3	23 ft (7.0 m)	5	11 ft (3.4 m)		

VENTING INSTALLATION

Install the venting termination according to the diagrams and instructions below.

Horizontal Termination (Condensate collector must be used)
Slope the venting 1/4 inch per foot toward the water heater according to the vent manufacturer's installation instructions. Dispose of condensate per local codes.

The air intake must be located in relation to the exhaust as shown below. The air intake must angle 1/4 inch per foot toward the termination to prevent entry of rain.

The vent termination and air intake must be in the same pressure zone and face the same direction.

Vertical Termination(Condensate collector must be used in all installations)
Slope the venting 1/4 inch per foot away from the water heater according to the vent manufacturer's installation instructions. Dispose of condensate per local codes.

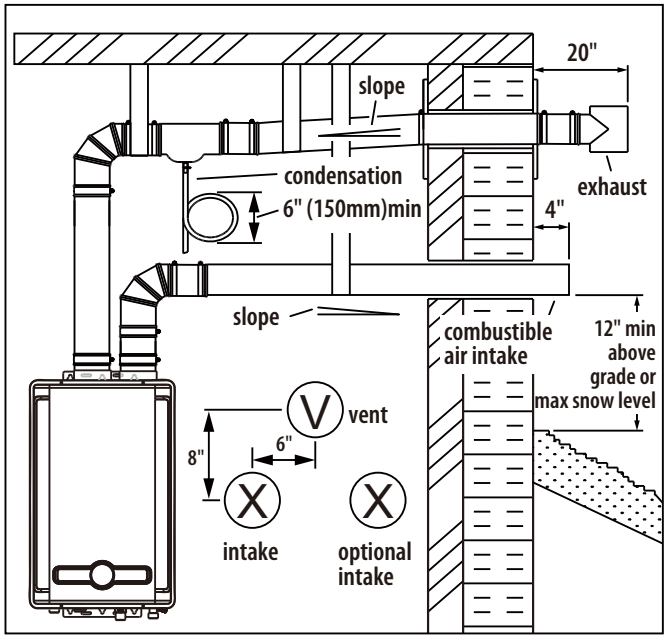

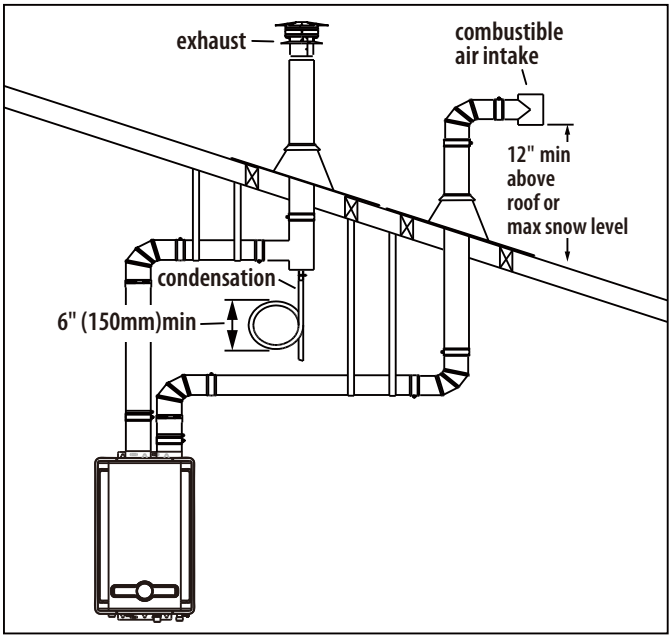

⚠ WARNING

Installation diagrams above show the typical way to install the vent for indoor water heater. Only properly qualified personnel should install this appliance. Improper installation or installation by a non-qualified installer may void warranty. Failure to comply with state and local codes pertaining to water heater installations may also void warranty.

INSTALLATION

INSTALLATION STEPS - Venting

⚠ CAUTION

- Condensate can form in the vent of high efficiency direct vent appliances. Without proper drainage, condensate will damage the heat exchanger.
- To prevent condensate damage, follow these instructions.
  DO NOT allow condensate to enter the water heater.
  DO NOT connect the condensate drain pipe directly to the rain sewer.
  DO NOT connect the condensate drain line with an air conditioning evaporator coil drain.
  DO NOT connect the condensate drain line to the pressure relief valve/line of the appliance.
- Use only venting that is approved and identified as acceptable for your particular model.
- Slope the venting toward the condensate drain point according to the vent manufacturer's installation instructions.
- All condensate must drain and be disposed of according to local codes.
- Use only corrosion resistant materials for the condensate drain lines such as PVC pipe or plastic hose.
- The condensate drain pipe (along its entire length) must be at least the same diameter as the drain line.
- The end of the condensate drain pipe should be open to the atmosphere. The end should not be under water or other substances.
- To minimize freezing of the condensate, run the condensate drain line through an interior wall or between insulation and an interior wall.

INSTALLATION STEPS - Connect Water Supply

⚠ CAUTION

- The piping (including soldering materials) and components connected to this appliance must be approved for use in potable water systems.
- Purge the water line to remove all debris and air. Debris will damage the water heater.
- The appliance must not be connected to a system that was previously used with a non-potable water heating appliance.
- Ensure that the water filter on the water heater is clean and installed.
- Verify water pressure is no more than 145 PSI (1000 kPa).
- DO NOT introduce toxic chemicals such as those used for boiler water treatment to the potable water.
- Water connections to the water heater should follow all state and local plumbing codes.

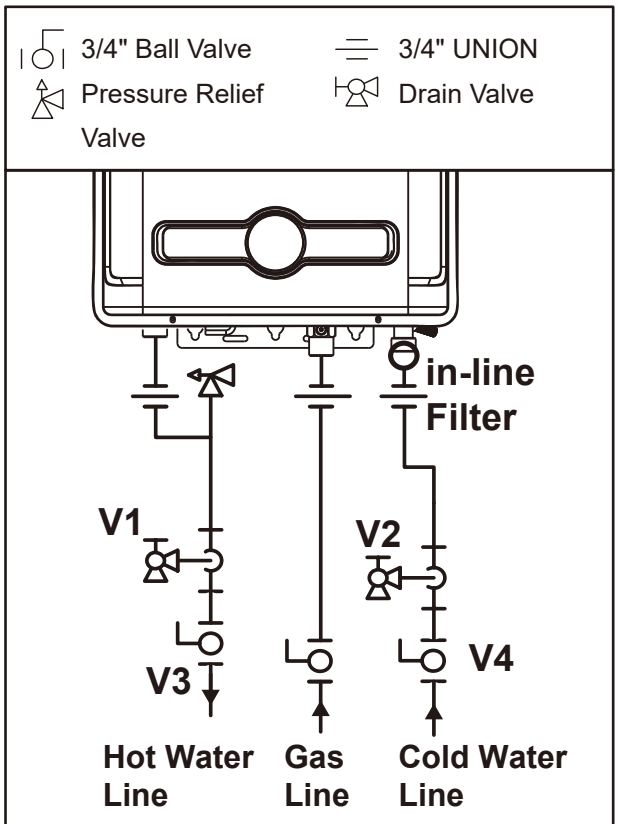

PIPING DIAGRAM FOR BASIC INSTALLATION

INSTALLATION

INSTALLATION STEPS - Connect Water Supply

To connect the water supply, follow the instructions below.

Step 1 Connect the cold water supply line to the water heater on the 3/4" connection at the bottom of the water heater marked "Water Input" using the cold water service valve(not provided).

Step 2 Connect the hot water supply line to the water heater on the 3/4" connection at the bottom of the water heater marked "Water Output" using the hot water service valve(not provided).

Step 3 Test water connections for leaks. Turn on water and purge water through the water heater and system. Tighten the connections if needed. Do Not over tighten. Flow for 1-2 minutes. Ensure all air is eliminated.

Note: The piping diagram is not an engineered drawing. It is intended only as a guide and not as a replacement for professionally engineered project drawings. This drawing is not intended to describe a complete system. It is up to the contractor/engineer to determine the necessary components and configuration of the particular system being installed. This drawing does not imply compliance with local building code requirements. It is the responsibility of the contractor/engineer to ensure installation is in accordance with all local building codes. Confer with local building officials before installation.

INSTALLATION STEPS - Pressure Relief Valve(not provided)

⚠ WARNING

Water discharged from the pressure relief valve could cause severe burns instantly or death from scalds.

⚠ CAUTION

An approved pressure relief valve is required by the American National Standard (ANSI Z21.10.3) for all water heating systems and must be accessible for servicing. When connecting a pressure relief valve, follow the guidelines below:

- The pressure relief valve must comply with the standard for Relief Valves and Automatic Gas Shutoff Devices for Hot Water Supply Systems ANSI Z21.22 and /or the standard Temperature, Pressure, Temperature and Pressure Relief Valves and Vacuum Relief Valves, CAN1-4.4.
- The pressure rating of the relief valve must not exceed 145 psi. Its Btu/hr must be no less than the maximum Btu/hr of the appliance.
- The discharge from the pressure relief valve should be piped to the ground or into a drain system per local codes.
- The pressure relief valve must be manually operated once a year to check for correct operation.
- The discharge line from the pressure relief valve should pitch downward and terminate 6 in. (152 mm) above drains where discharge will be clearly visible.
- The discharge end of the line should be plain (unthreaded) and a minimum of 3/4 in. nominal pipe diameter. The discharge line material must be suitable for water at least 180°F.
- The pressure relief valve is connected below the appliance. DO NOT place any other valve or shut off device between the pressure relief valve and the water heater.
- If a pressure relief valve discharges periodically, this may be due to thermal expansion in a closed water supply system. Contact the water supplier or local plumbing inspector on how to correct this situation. DO NOT plug the pressure relief valve.
- The American National Standard (ANSI Z21.10.3) does not require a combination temperature and pressure relief valve for this appliance. However, local codes may require a combination temperature and pressure relief valve.
- Protect pressure relief valve and pressure relief valve discharge line from freezing. Do not plug or restrict flow of the pressure relief valve.

INSTALLATION

INSTALLATION STEPS - Pressure Relief Valve(not provided)

⚠ CAUTION

- DO NOT plumb the pressure relief valve with the condensate drain; both must be plumbed independently to drain.
- DO NOT plug the pressure relief valve and do not install any reducing fittings or other restrictions in the relief line. The pressure relief line should allow for complete drainage of the valve and the line.

Pressure Relief Valve Maintenance

For proper care of this approved pressure relief valve, it is recommended that the valve is manually operated once a year. In doing so, it will be necessary to take precautions with regard to the discharge of potentially scalding hot water under pressure. Ensure discharge water has a safe place to flow. Contact with your body or property may cause damage or harm.

INSTALLATION STEPS - Connect Gas Supply

⚠ WARNING

- Gas piping should be sized, installed, and tested only by a licensed professional! Improper installation can result in improper equipment performance or a hazardous situation.
- Turn off the gas before installation.
- Gas is flammable. DO NOT smoke or use other ignition sources while working with gas.
- Confirm the gas type before connecting. Failure to install correct gas type may result in injury or damage to the unit.
- DO NOT turn on the water heater or gas until all fumes are gone.

To connect the gas supply, follow the instructions below.

Step 1 Install a manual shutoff (control) valve(not provided) in the gas supply line to the water heater. A union can be used on the connection above the shut off valve for the future servicing or disconnection of the water heater.

Step 2 Check the type of gas and gas supply pressure before connecting the water heater. If the water heater is not of the gas type that the installation location is supplied with, DO NOT connect the water heater. Contact the dealer for the proper water heater to match the gas type.

Step 3 Check the gas supply pressure immediately upstream at a location provided by the gas company. Supplied gas pressure must be within the limits shown in section "SPECIFICATIONS" with all gas appliances operating. Install a proper gas regulator upstream of a water heater if gas supply pressure is too high.

Step 4 Check all joints including the heater for gas leaks by means of soap, gas leak detector solution, or an equivalent nonflammable solution, as applicable before placing the appliance in operation. (Since some leak test solutions, including soap and water, may cause corrosion or stress cracking, the piping should be rinsed with water after testing, unless it has been determined that the leak test solution is non-corrosive.)

Step 5 Use approved connectors to connect the water heater to the gas line. Purge the gas line of any debris before connection to the water heater.

INSTALLATION

INSTALLATION STEPS - Connect Gas Supply

To connect the gas supply, follow the instructions below.

Step 6 Ensure any compound used on the threaded joint of the gas piping is a type that resists the action of liquefied petroleum gas (propane/ LPG).

Step 7 Review the installation location taking into account all gas users on site. Calculate the gas piping that will be required to service the installation. The gas supply line should be sized and installed to provide a supply of gas sufficient to meet the maximum demand of the heater and all other gas consuming appliances at the location. Note: Reference the National Fuel Gas Code, NFPA 54, for proper line sizing.

Step 8 Perform a leak and pressure test prior to operating the water heater. If a leak is detected, do not operate the water heater until the leak is repaired.

⚠ CAUTION

The gas supply must be capable of handling the entire gas load required at the location. Gas line sizing is based on gas type, the pressure drop in the system, the gas pressure supplied, and gas line type. Use 3/4" pipe for water heaters listed in this manual.

INSTALLATION STEPS - Connect Power Supply

⚠ WARNING

- DO NOT use an extension cord or adapter plug with this appliance.
- The water heater must be electrically grounded in accordance with local codes and ordinances or, in the absence of local codes, in accordance with the National Electrical Code, ANSI/NFPA No.70 or the Canadian Electrical Code – Part 1 (CGAS C22.1) depending on location.
- Indoor water heaters are equipped with a three-prong (grounding) plug for your protection against shock hazard and should be plugged directly into a properly grounded three-prong receptacle. DO NOT cut or remove the grounding terminal from this plug.

⚠ CAUTION

- DO NOT rely on the gas or water piping to ground the water heater. Ground locations are provided inside the water heater.
- The water heater requires 120 V AC, 60 Hz power from a properly grounded circuit.
- The wiring diagram is located on the inside of the water heater front cover.
- **DO NOT PLUG IN THE UNIT UNTIL INSTALLATION IS COMPLETE, TESTED, AND READY FOR INITIAL START UP.**

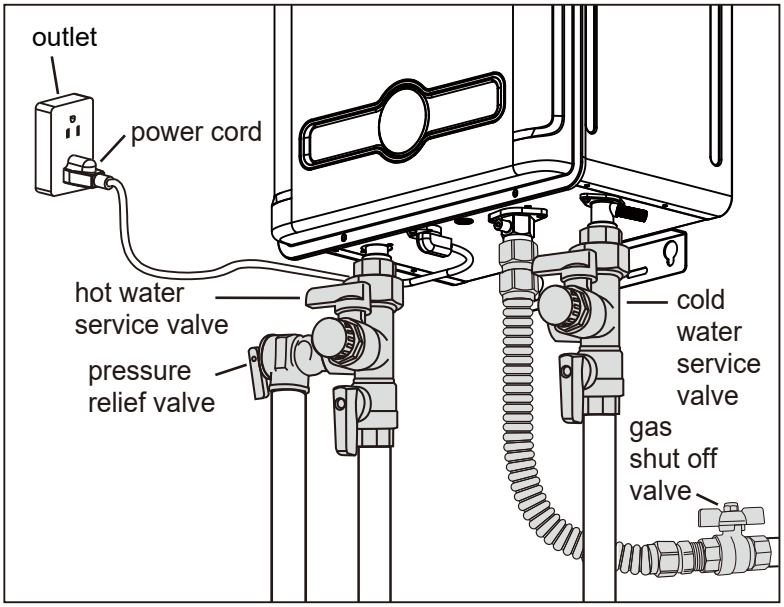

INSTALLATION

Final Checklist

- ☐ The water heater is not subject to corrosive compounds in the air.
- ☐ The water supply does not contain chemicals and does not exceed total hardness that will damage the heat exchanger.
- ☐ Clearances from the water heater unit are met.
- ☐ Clearances from the vent termination / air intake are met.
- ☐ Ensure you have used the correct venting products for the model installed and that you have completely followed the venting manufacturer's installation instructions and these installation instructions.
- ☐ Verify that the vent system does not exceed the maximum length for the number of elbows used.
- ☐ Verify that the vent pipe has a slope of 1/4 inch per foot toward the water heater.
- ☐ Purge the water line of all debris and air by closing the hot isolation valve and opening the cold isolation valve and its drain. Debris will damage the water heater. Use a bucket or hose if necessary.
- ☐ Ensure that hot and cold water lines are not crossed to the unit and are leak free.
- ☐ Ensure that a pressure relief valve is installed with a rating that exceeds the BTU input of the water heater model. Refer to the rating plate on the side of the water heater for BTU input.
- ☐ A manual gas control valve has been placed in the gas line to the water heater.
- ☐ Check the gas lines and connections for leaks.
- ☐ Confirm that the gas inlet pressure is within limits.
- ☐ Confirm that the water heater is rated for the gas type supplied.
- ☐ Confirm that the electricity is supplied from a 120 VAC, 60 Hz power source, is in a properly grounded circuit, and is turned on.
- ☐ Verify the system is functioning correctly by connecting your manometer to the gas pressure test port on the water heater.
- ☐ Operate all gas appliances in the home or facility at high levels. The inlet gas pressure at the water heater must not drop below the level listed on the rating plate.
- ☐ DO NOT introduce toxic chemicals such as those used for boiler water treatment to the potable water.
- ☐ If the water heater is not needed for immediate use, then drain the water from the heat exchanger.
- ☐ Ensure the front panel is secured.
- ☐ Make sure there is no blockage to the vent termination or air intake.
- ☐ The installation must conform with local codes or, in the absence of local codes, with the National Fuel Gas Code, ANSI Z223.1/NFPA 54, or the Natural Gas and Propane Installation Code, CSA B149.1. If installed in a manufactured home, the installation must conform with the Manufactured Home Construction and Safety Standard, Title 24 CFR, Part 3280 and/or CAN/SCA Z240 MH Series, Mobile Homes.
- ☐ Make sure no gasoline or other flammable vapors and liquids are stored or used in the vicinity of this or any other appliance.
- ☐ Tape the manual to the water heater or keep the manual near by.

OPERATION INSTRUCTIONS

Description

- The temperature can be adjusted between 95°F - 140°F (35°C - 60°C). The default setting temperature of water heater is 105°F (40°C).
- Only a small amount of water and a low water pressure (15psi) are required for the unit. Unit requires 0.67 gpm (2.5 L/min) to enable the unit. Unit stays in operation until the flow drops below 0.53 gpm (2 L/min).
- The unit is provides hot water over a wide range of flow rates and incoming water temperatures across the capacity range of the unit.
- The burner ignition is electronic. The unit has no pilot light and consumes no gas when the heater is not being used.
- The unit's integrated control system constantly monitors the temperature of the water being produced and adjusts the burner accordingly to deliver a stable supply of hot water.
- Keep the combustion air vent pipe location free of chemicals, such as chlorine or bleach, that produce fumes. These fumes can damage components and reduce the life of your appliance. Damage and repair due to scale in the heat exchanger is not covered by warranty.

FOR YOUR SAFETY READ BEFORE OPERATING

WARNING: If you do not follow these instructions exactly, a fire or explosion may result causing property damage, personal injury or loss of life.

A. This appliance does not have a pilot. It is equipped with an ignition device which automatically lights the burner. Do not try to light the burner by hand.

B. **BEFORE OPERATING** smell all around the appliance area for gas. Be sure to smell next to the floor because some gas is heavier than air and will settle on the floor.

WHAT TO DO IF YOU SMELL GAS

- Do not try to light any appliance.
- Do not touch any electric switch; do not use any phone in your building.
- Immediately call your gas supplier from a neighbor's phone. Follow the gas supplier's instructions.
- If you cannot reach your gas supplier, call the fire department.

C. Only operate water heater by hand. Never use tools. If the appliance is not operating properly, don't try to repair it, call a qualified service technician. Use of force or attempted repair may result in a fire or explosion.

D. Do not use this appliance if any part has been under water. Immediately call a qualified service technician to inspect the appliance and to replace any part of the control system and any gas control which has been under water.

OPERATING INSTRUCTIONS

1. **STOP!** Read the safety information above.
2. Turn off all electric power to the appliance.
3. Do not attempt to light the burner by hand.
4. Turn the Gas Shutoff Valve located on the outside of the unit clockwise to the "CLOSE" position.
5. Wait five (5) minutes to clear out any gas. Then smell for gas, including near the floor. If you smell gas, STOP! Follow "B" in the safety information above on this label. If you don't smell gas, go to the next step.
6. Turn gas control knob counterclockwise to "OPEN".
7. Turn on all electric power to the appliance. If the appliance will not operate, follow the instructions "To Turn Off Gas To Appliance" and call your service technician or gas supplier.

GAS SHUTOFF VALVE

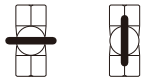

CLOSE **OPEN**

TO TURN OFF GAS TO APPLIANCE

1. Turn off all electric power to the appliance if service is to be performed.
2. Turn the Gas Shutoff Valve located on the outside of the unit clockwise to the "CLOSE" position.

How to operate the Water Heater



1. Allow water to flow through the water heater unit. Allow the water to flow continuously to flush out any debris as well as purge the pipes of any air.

2. Power on the socket connected to the water heater. An audible beep will be heard and the LED display will light up for 2 seconds.

3. Press ⏻ to turn the water heater ON/OFF. When the unit is ON, the LED will display the water's temperature. Check the product specification page to check minimum water flow for activation.

4. Press ⊖ or ⊕ to change the water temperature of the outlet. The temperature setting ranges from 95-140°F (35°C - 60°C).
   Caution: If the unit is paused there may be an initial burst of very hot water when resuming. Please allow the water to flow for a few moments to let the temperature settle. Test the water temperature with your hand before entering bath or shower.

5. Press ⊖ and ⊕ at the same time to switch the temperature between Fahrenheit and Celsius.

6. The water heater can be operated in three modes, including "Auto", "Bath" and "ECO". The factory default is AUTO mode. Press ⊞ to switch.

7. "Auto" : the water heater heats the water to the pre-set temperature automatically.

8. "Bath" : the user can set the volume of water and set the temperature in the Bath mode. When switched to "Bath", press ⊖ or ⊕ to change the volume of water. When finish volume setting and the screen stops flashing, press ⊖ or ⊕ again to set the water temperature. When the water flow reaches the pre-set volume, the water heater beeps to remind the user to turn off the water. In Bath mode, the default setting temperature is 122°F (50°C). The default water volume is 10.6 gallons (40 L), the water volume setting range is 10.6-258.8 gallons (40 L-980 L), and the set water volume increases or decreases in increments of 5.3 gallons (20 L).

9. "ECO" : the water heater uses less gas than in the standard mode.

10. 🔥 indicates the working condition of the water heater. It will be lighted to indicate that the water heater is working. When the water heater isn't heating, 🔥 will disappear.

How to operate the Water Heater

11.  indicates the working condition of the fan inside water heater. It will be lighted to indicate that the fan is working. When the fan stops,  will disappear.

12.  indicates the water flow condition of the water heater. It will be lightened to indicate that the water is flowing. When the flow stops or is too low,  will disappear.

⚠ DANGER

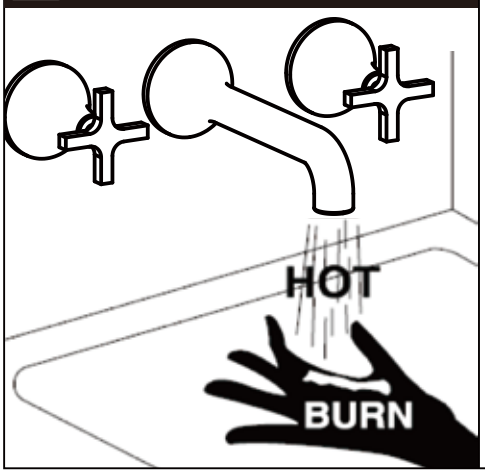

- Water temperatures over 125°F (52°C) can cause severe burns or scalding resulting in death!
- Hot water can cause first degree burns with exposure for as little as:
  3 seconds at 140°F (60°C)
  20 seconds at 130°F (54°C)
  8 minutes at 120°F (49°C)
- Always test the water temperature by feeling the water prior to entering a shower, bath, etc.
- Children, disabled and elderly are at highest risk of being scalded.
- Contact a licensed plumber or local plumbing authority for clarification or additional information.

⚠ CAUTION

- The volume measurement only keeps track of the water volume that passes through the water heater. For example, if hot water is flowing into tub that already contains cold water, the volume of water selected on the heater will be less than the total volume of water in the tub. This could lead to overflow or damage!

- Check local codes for the maximum water temperature setting allowed when used in nursing homes, schools, day care centers, and all other public applications.

LONG-TERM SHUTDOWN PRECAUTIONS AND FREEZE PROTECTION

If the water heater is left unattended for a long period of time, or if the water heater is not going to be used during a period of possible freezing weather, it is recommended that the water inside

⚠ CAUTION

- Cold air may enter the unit through the air intake or the exhaust system. Take precautions for long term shutdowns even if the water heater is installed indoors in an area that does not allow direct exposure to freezing temperatures.
- Temperatures at or below 0°C (32°F) can cause permanent damage to the water heater and/or the piping system due to freezing. Freezing water expands rapidly and can cause mechanical damage, and pipe ruptures can result from only brief exposure to freezing temperatures.
- In cold regions, insulating material or heat tracing can be used to protect pipes and fittings. Please consult your dealer if necessary.
- When the gas water heater is powered on, the water heater freeze protection starts working when the internal temperature of water heater reaches 35.6 - 44.6°F(2-7°C) and stops when the internal temperature of water heater reaches 50°F(10°C) or above.

⚠ WARNING

- To avoid burns, wait until the equipment cools down before draining the water. The water in the appliance will remain hot after it is turned off.

To manually drain the water:

1. Shut down the water heater by pressing ⏻.
2. Disconnect the power to the water heater.
3. Shut off cold water supply and gas supply.
4. Place a container to catch the water. Remove the drain caps on both isolation valves and open both valves above the caps (blue and red valve handles).
5. Drain the water and re-install the caps of the valves.
6. Turn off the valves above the caps.

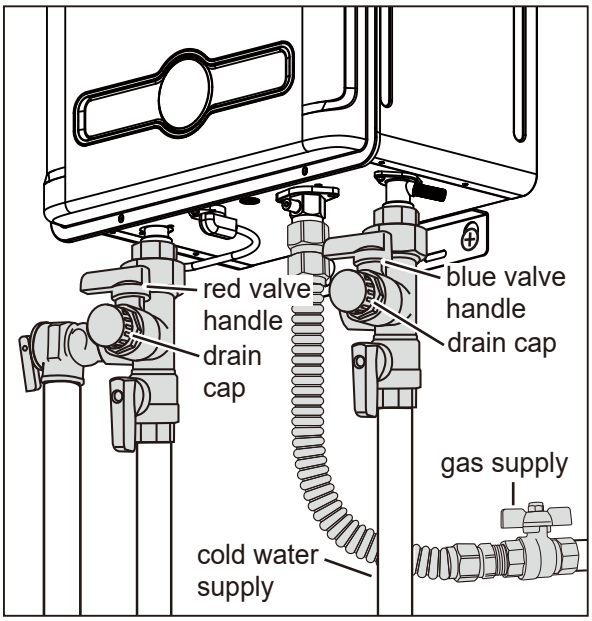

To resume normal operation:

1. Confirm that the gas supply is turned off, and that all faucets are closed.
2. Open the cold water supply.
3. Open a faucet and confirm that water flows, and then close it.
4. Turn on the power.
5. Turn on the gas supply.
6. Turn on the water heater by pressing ⏻.

Running a low volume of water through the water heater to prevent freezing

If the temperature exceeds the ability of the water heater freeze protection, or if power is lost, the following steps may prevent the water heater and external piping from freezing.

1. Turn the water heater off.
2. Close the gas supply valve.
3. Turn on a hot water faucet to flow water about 0.1 gal/min or to where the stream is about 0.2 inches thick.

When the water heater or external piping has frozen

1. Do not operate the water heater if it or the external piping is frozen.
2. Close the gas and water valves and turn off the power.
3. Wait until the water thaws. Check by opening the water supply valve.
4. Check the water heater and the piping for leaks.

⚠ WARNING

- To prevent damage, NEVER force a water heater to operate while in a frozen state. NEVER bypass any safety feature.
- Damages resulting from incorrect installation or from use of products not approved by ANZZI ARE NOT covered by warranty.

MAINTENANCE AND INSPECTION

⚠ CAUTION

The heater and exhaust piping will be hot during and shortly after use. Use caution when working in the area around the heater.

To keep your water heater operating optimally please refer to the below recommended inspection and maintenance checklists. ANZZI recommends a periodic inspection performed by a qualified service technician. An annual inspection is normally sufficient. Frequent visual inspections by the owner are recommended. Any repairs should be performed by a qualified service technician using only factory authorized components. Contact ANZZI for assistance in locating a qualified technician.

Routine Inspection Checklist

☐ Any flammable materials in the vicinity of the water heater or exhaust piping?
☐ Any unusual noises coming from the heater while in operation?
☐ Are the air intake and exhaust free from any blockage or foreign objects?
☐ Are there any signs of water leakage around the water heater or pipes?
☐ Any signs of water leaking near heater or pipes?
☐ Any abnormal appearance to unit casing?

Maintenance Checklist

☐ Clean outside of unit and control panel.
☐ Use a wet cloth to remove any surface dirt. Use a dry cloth to wipe it dry.
☐ A very mild detergent may be used if unit is very dirty.
☐ Never use any petroleum based cleaners or solvents. These solvents can damage the panel.
☐ Check and clear Air Intake of any debris that might impede air flow.
☐ Clean inlet water screen.
☐ Examine venting system.
☐ Clean inside of unit by vacuuming or blowing out dust that collects in the unit. Do not open the burner, this cleaning should only be done by authorized service personnel.
☐ Visual flame inspection.
☐ Lime scale cleaning (if required).

MAINTENANCE PROCEDURES

BURNER INSPECTION AND CLEANING

1. The burner must flame evenly over the entire surface of the burner head when operating correctly.
2. The flame should burn with a clear, blue, stable flame.
3. Presence of a yellow flame or of black deposits on the burner head indicates cleaning and/or burner replacement is required.

MAINTENANCE BLOWER

1. The fan motor is permanently lubricated and does not require periodic lubrication.
2. If the engine fails, it must be replaced by a qualified technician only.

PURGE THE PRESSURE RELIEF VALVE

If a pressure relief valve discharges periodically, this may be due to thermal expansion occurring in a water supply system in a closed circuit. Contact the water supplier or local plumbing inspector for the best way to solve this problem. Do not block the pressure relief valve.

MAINTENANCE AND INSPECTION

LIME SCALE CLEANING PROCEDURE

Materials required:

- Five gallon container
- Four gallons of virgin food grade white vinegar or virgin food grade citric acid
- Small inline recirculation pump capable of circulating 2 - 4 gpm (7.6 - 15.1 L/min)
- Set of hoses for connecting recirculation pump to and from the water heater and the five gallon container.

1. Disconnect electrical power to the water heater.
2. Close the shutoff valves (V3 and V4) on both the hot water and cold water lines.
3. Connect a hose (H1) from the pump outlet to the cold water line at service valve (V2).
4. Connect drain hose (H3) to hot water line at service valve (V1).
5. Pour 4 gallons(15.1L) of undiluted virgin, food grade,white vinegar into 5 gallon container.
6. Place the drain hose (H3) and the hose (H2) connected to the pump inlet into the cleaning solution in the container.
7. Open the service valves (V1 and V2) on the hot water and cold water lines.
8. Operate the pump and allow the vinegar to circulate through the water heater for at least 45 minutes at a rate of 4 gpm (15.1 L/min).
9. Turn off the pump.
10. Rinse the vinegar from the water heater as follows:
    a. Remove the free end of the drain hose (H3) from the pail. Place in sink or outside to drain.
    b. Close service valve (V2), and open shutoff valve (V4). Do not open shutoff valve (V3).
    c. Allow water to flow through the water heater for 5 minutes.
    d. Close shutoff valve (V4). When unit has finished draining, remove the in-line filter at the cold water inlet and clean out any residue. Place filter back into unit and open valve (V4).
    e. Close service valve (V1), and open shutoff valve (V3).
11. Disconnect all hoses.
12. Restore electrical power to the water heater.

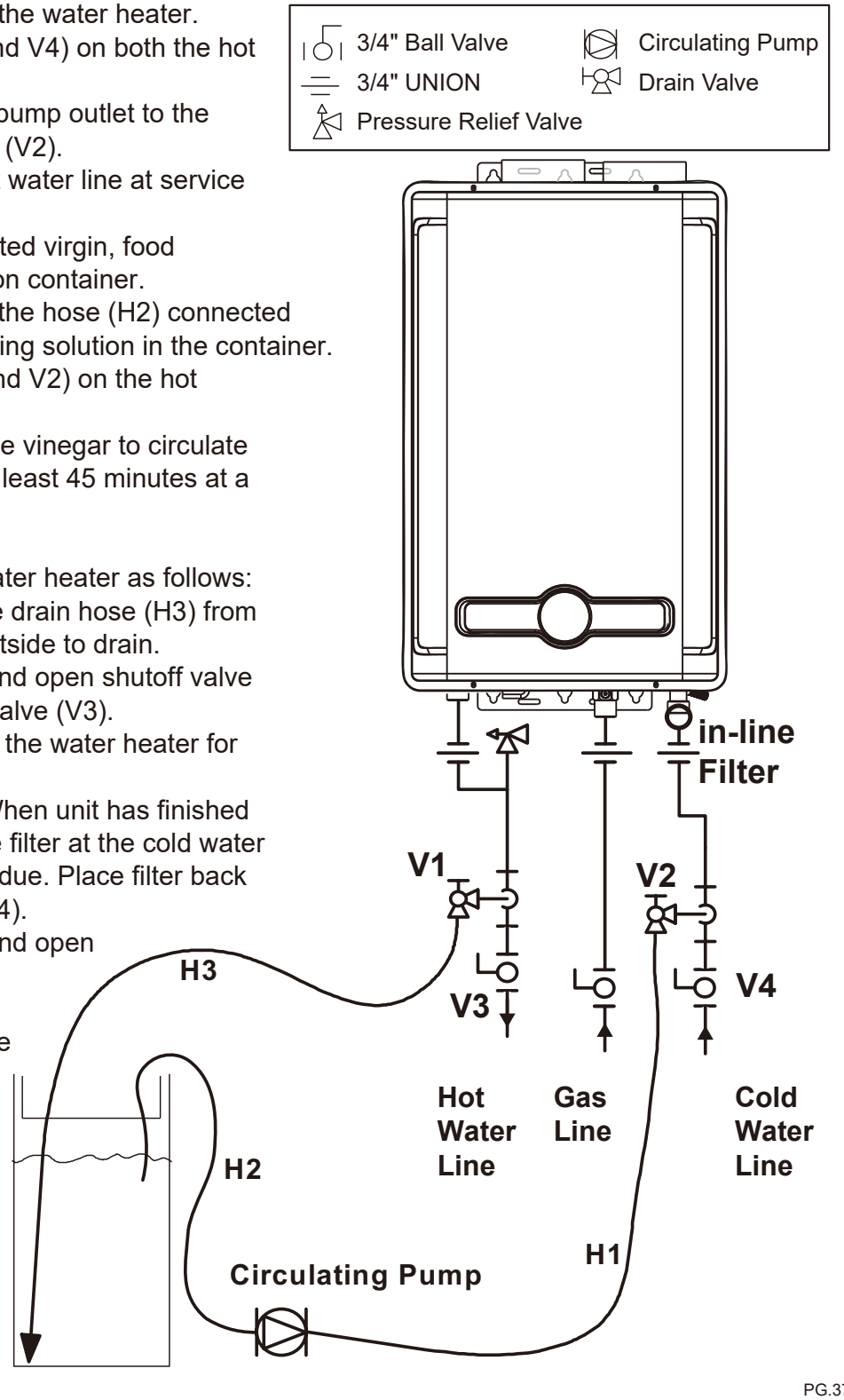

MAINTENANCE AND INSPECTION

ELECTRICAL MAINTENANCE WARNINGS

⚠ CAUTION

Label all wires prior to disconnection when servicing controls. Wiring errors can cause improper and dangerous operation. Always verify proper operation after servicing.

TROUBLESHOOTING

For operation difficulties with your unit, please consult the following table for guidance. If you need further assistance, call ANZZI(305-363-4679). Please have product information ready when you call including serial number, date of purchase and diagnostic code if shown on the control panel.

Whenever a failure occurs, an alert sounds and a diagnostic code is displayed to indicate the failure mode at the time of occurrence.



Codes	Possible Causes		Recommended Action
E0	Outlet water temperature sensor failure		Contact ANZZI or qualified service technician.
E1	Ignition failure		Check that the gas is turned on at the water heater, gas meter, or cylinder. If the system is propane, make sure that gas is in the tank. Ensure appliance is properly grounded. Press ⏻ to power off, press again to power on to Reset. Contact ANZZI or qualified service technician.
		licensed professional only	Ensure gas type and pressure is correct. Ensure gas line, meter, and/or regulator is sized properly. Bleed all air from gas lines. Ensure igniter is operational. Check igniter wiring harness for damage. Check gas solenoid valves for open or short circuits. Remove burner cover and ensure all burners are properly seated. Remove burner plate and inspect burner surface for condensation or debris.
E2	Flame failure(during operation)		Check that the gas is turned on at the water heater, gas meter, or cylinder. Check for obstructions in the flue outlet. If the system is propane, make sure that gas is in the tank. Press ⏻ to power off, press again to power on to Reset. Contact ANZZI or qualified service technician.
E9	False Flame		
		licensed professional only	Ensure gas line, meter, and/or regulator is sized properly. Ensure gas type and pressure is correct. Bleed all air from gas lines. Ensure proper venting material was installed. Ensure vent length is within limits. Check power supply for loose connections. Check power supply for proper voltage and voltage drops. Ensure flame rod wire is connected. Check flame rod for carbon build-up. Disconnect and reconnect all wiring harnesses on unit and PC board. Check for DC shorts at components. Check gas solenoid valves for open or short circuits. Remove burner plate and inspect burner surface for condensation or debris.

TROUBLESHOOTING

Codes	Possible Causes		Recommended Action
E3	Over temperature protection is triggered due to detection of temperature higher than 185°F(85°C).		Check the water pressure, water pressure too low. Turn off the power supply and turn on again to see if problem is solved.
		licensed professional only	Check for foreign materials in combustion chamber and/or exhaust piping. Check for blockage in the heat exchanger.
E4	Inlet water temperature sensor failure		Check sensor wiring for damage. Measure resistance of sensor. Clean sensor of scale build-up. Replace sensor. Contact ANZZI.
E6	Water sensor overheat protection (Inlet temperature≥167°F(75°C)/ Outlet temperature≥185°F(85°C))		
E5	Fan failure		Ensure fan will turn freely. Check wiring harness to motor for damaged and/or loose connections. Measure resistance of motor winding. Contact ANZZI.
E7	Proportional valve or Solenoid valve failure		Check Proportional valve or Solenoid valve wiring harness for loose or damaged terminals. Measure resistance of valve coil.
E8	Flue pipe outlet blockage		Check the air intake/exhaust flue duct. Check all vent components for proper connections. Press ⏻ to power off, press again to power on to Reset.
		licensed professional only	Ensure approved venting materials are being used. Ensure vent length is within limits. Check fan for blockage.

Symptoms	Possible Causes	Recommended Action
Power indicator is OFF.	No power.	1. Use water heater when power is restored. 2. Check circuit breaker and reset if needed. 3. Check ground fault circuit interrupter (GFCI) and reset it if necessary.
	Power cord not properly plugged in.	Check power plug and ensure properly plugged.
No hot water flow when hot water faucet is turned on.	Fuel is not flowing to heater.	Fuel gas valve needs to be opened. Refill gas tank (if applicable).
	Water valve closed.	Open the water inlet valve.
	Power outage.	Unit requires 120V power to operate.
	Flow is too low or became too low. (less than 0.67 gpm(2.5 L/min)).	Raise the water flow to the water heater.
	Freezing temperatures may have frozen water in the heater or hot water system.	See "LONG-TERM SHUTDOWN PRECAUTIONS AND FREEZE PROTECTION" section of this manual for procedure to thaw unit.
	Fuel gas meter special control restrictions.	Some fuel gas valves may have special restrictions or digital controls. Consult your gas supplier and/or a service professional for assistance.
	Distance from heater to point of use is too long.	Allow time for hot water to travel through system to reach the point of use.

TROUBLESHOOTING

Symptoms	Possible Causes	Recommended Action
Hot water is not the right temperature (too hot or too cold).	Temperature setting was reset due to power outage.	Reset the water temperature.
	Flow is beyond capacity.	When the water heater is working in "Bath" mode, it will stop heating while the outlet water reaches the preset volume. Press ⊞ to switch to "Auto" mode for constant warm water.
	Incoming water is too warm.	If incoming water to unit is very warm and the flow is just above minimum requirements, the heat generated by the burner while operating at minimum capacity can make the water hotter than desired. Increase the hot water flow at point of use so that the heating system can control the temperature better.
	Incoming water is too cold.	Try to turn the handle of faucet to the hot side. If the water isn't hot enough by doing step above, try to lower the flow.
Hot water flow is lower than expected.	Water supply is restricted.	Check and fully open water inlet valve(s). Make sure there isn't blockage on the inlet filter.
	Heat exchanger in unit is scaled.	Clean heat exchanger by flushing per maintenance procedure.
	Incoming water temperature is colder than expected.	Colder than normal incoming supply water will reduce the amount of hot water than can be produced. Although the amount of heat output from the unit is still at full capacity, you must reduce the user flow and operate within the capacity range of the heater.
The hot water flow appears white and turbid.	Small bubbles may appear when water is heated.	No action is needed.
Vent system issue.	Vent system is restricted.	Check air intake and exhaust ducts to ensure they are not damaged, corroded, blocked, etc.
"Smoke" observed coming from exhaust system during cold temperatures.	Water vapor produced during combustion is condensed in the exhaust as the hot gas is cooled by the outside air.	No action is needed.
Water leaking from safety valve outlet.	Water system is operating above designed pressure.	Consult professional for system inspection.
	Safety valve is damaged.	Replace safety valve. Consult professional if neeeded.
Blower fan noise is heard after water heater stops working.	The blower is designed to run for 30 seconds after burner goes out.	No action is needed.
The water heater does not beep when the flow volume reaches the preset under "Bath" mode.	Wrong calculation.	Displayed volume number represents 1/10th of the actual total flow.
	Measuring flow of only hot water instead of hot water and cold water combined.	The volume measurement only keeps track of the water volume that passes through the water heater. If hot water going to a tub is combined with cold water, the volume computed would not equal the total amount that may have been dispensed.
Unresolved problem.	Other assistance required.	Consult ANZZI or contact an authorized service professional.

WIRING DIAGRAMS

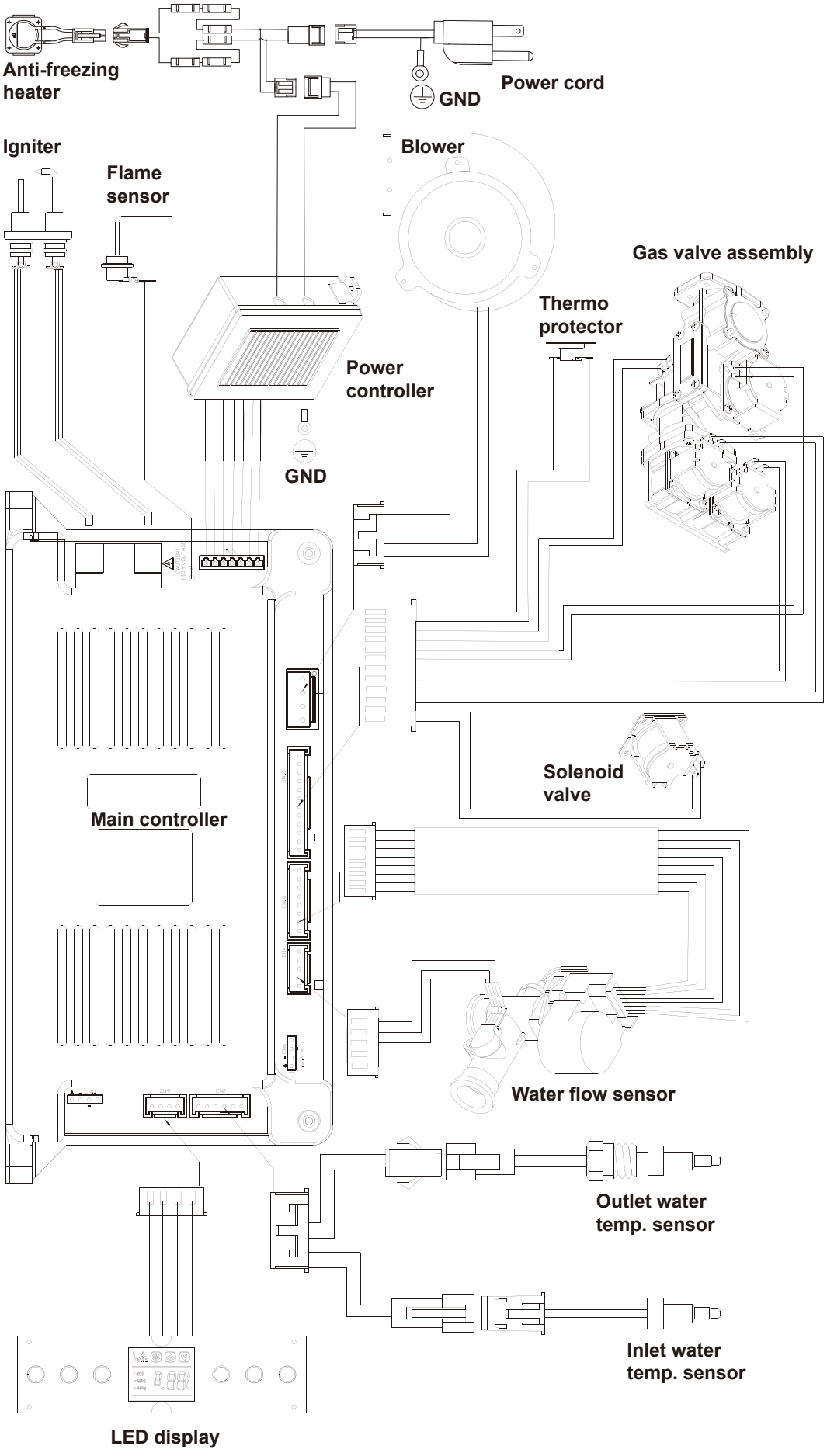

REPLACEMENT PARTS

⚠ WARNING

For your safety, DO NOT attempt to disassemble, repair, or replace any portion of this unit. Refer all repairs, service, and/or adjustments to qualified service personnel.

Address all parts orders to the distributor or store where the water heater was purchased. All parts orders should include:

1. The model and serial number of the water heater from the rating plate.
2. Specify the gas type (natural or LP) as marked on the rating plate.
3. Parts description (as shown below) and number of parts desired.

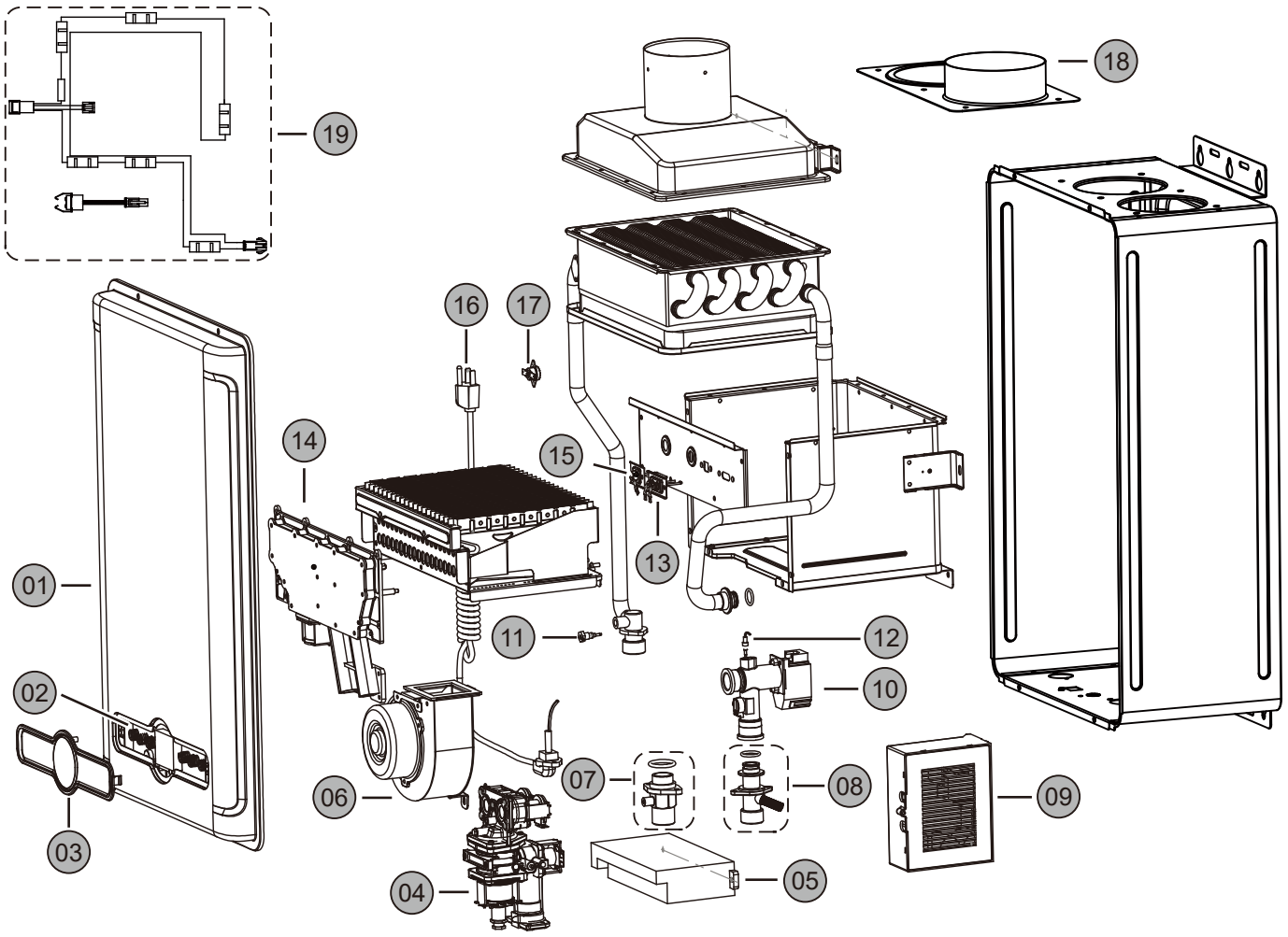

Part	Description	Part	Description	Part	Description
01	Front Cover	08	Inlet Water Connector	14	Mainfold
02	LED Display	09	Power Controller	15	Flame Sensor
03	Control Panel Window	10	Water Flow Sensor	16	Power Cord
04	Gas Valve Assembly	11	Outlet Water Temp. Sensor	17	Thermo Protector
05	Main Controller	12	Inlet Water Temp. Sensor	18	Air Inlet Bracket
06	Blower	13	Igniter	19	Anti-freezing Heater
07	Gas Connector				

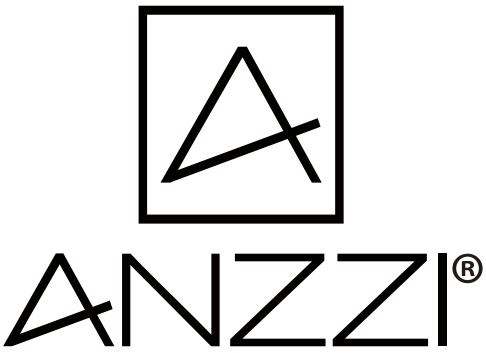
ANZZI®