ABB BALDOR RELIANCE

Customer information packet

CHC3525A

.5 AIR OVERHP, 1130RPM, 1PH, 60HZ, 56Z, 3528C
Class - None
Division - Not Applicable

Copyright © All product information within this document is subject to ABB Motors and Mechanical Inc. copyright © protection, unless otherwise noted.
11/5/2026 3:30:25 PM

Specifications

Enclosure	TEAO
Frame	56Z
Frame Material	Steel
Frequency	60.00 Hz
Haz Area Class and Group	None
Haz Area Division	Not Applicable
Motor Letter Type	Oil Capacitor Start and Run
Output @ Frequency	.500 HP @ 60 HZ
Phase	1
Synchronous Speed @ Frequency	1200 RPM @ 60 HZ
Voltage @ Frequency	115.0 V @ 60 HZ
	230.0 V @ 60 HZ
Agency Approvals	CURUS
	C UR US
Ambient Temperature	40 °C
Auxiliary Box	NO AUXILLARY BOX
Auxiliary Box Lead Termination	None
Base Indicator	Resilient
Bearing Grease Type	Polyrex EM (-20F +300F)
Blower	None
Current @ Voltage	2.400 A @ 230.0 V
	4.800 A @ 115.0 V
Design Code	-
Drip Cover	No Drip Cover
Duty Rating	CONT
Efficiency @ 100% Load	66.0 %
Electrically Isolated Bearing	Not Electrically Isolated
Feedback Device	NO FEEDBACK
Front Shaft Indicator	None
Heater Indicator	No Heater
High Voltage Full Load Amps	2.4 a
Insulation Class	F

Part Detail

Revision	D
Type	AC
Mech. spec.	35H317
Base	
Status	PRD/A
Elec. spec.	35WGZ930
Layout	35LYH317
Eff. date	12-02-2024
CD Diagram	CD0381
Poles	06
Leads	7#18
Proprietary	False
Created date	02-23-2023

Inverter Code	Not Inverter
KVA Code	C
Lifting Lugs	No Lifting Lugs
Locked Bearing Indicator	No Locked Bearing
Motor Lead Quantity/Wire Size	7 @ 18 AWG
Motor Lead Termination	None
Motor Standards	NEMA
Motor Type	3528C
Mounting Arrangement	F1
Number of Poles	6
Overall Length	13.53 IN
Power Factor	95
Product Family	General Purpose
Pulley End Bearing Type	Sealed Bearing
Pulley Face Code	Resilient Mount
Pulley Shaft Indicator	Standard
Rodent Screen	None
RoHS Status	ROHS COMPLIANT
Service Factor	1.00
Shaft Diameter	0.625 IN
Shaft Ground Indicator	No Shaft Grounding
Shaft Rotation	Reversible: Connected Standard
Shaft Slinger Indicator	No Slinger
Speed	1130 rpm
Speed Code	Single Speed
Starting Method	Direct on line
Thermal Device - Bearing	None
Thermal Device - Winding	None
Vibration Sensor Indicator	No Vibration Sensor
Winding Thermal 1	Automatic Thermal Overload
Winding Thermal 1 Location	SB
Winding Thermal 2	None

Nameplate

NP1280L									
CAT.NO.	CHC3525A								
SPEC.	35H317Z930G1								
HP	.5 AIR OVER								
VOLTS	115/230								
AMP	4.8/2.4								
RPM	1130								
FRAME	56Z	**HZ**	60		**PH**	1			
SER.F.	1.00	**CODE**	C	**DES**	-	**CL**	F		
NEMA-NOM-EFF	66	**PF**	95						
RATING	40C AMB-CONT								
CC									
DE	6203	**ODE**	6203						
ENCL	TEAO	**SN**							

AC Induction Motor Performance Data
Record # 109515
Typical performance - not guaranteed values

Winding: 35WGZ930-R002	**Type:** 3528C	**Enclosure:** TEAO

Nameplate Data			**230 V, 60 Hz: High Voltage Connection**	
Rated Output (HP)		.5 AIR OVER	**Full Load Torque**	2.337 LB-FT
Volts		115/230	**Start Configuration**	direct on line
Full Load Amps		4.8/2.4	**Breakdown Torque**	4.79 LB-FT
R.P.M.		1130	**Pull-up Torque**	1.5 LB-FT
Hz	60 **Phase**	1	**Locked-rotor Torque**	1.88 LB-FT
NEMA Design Code	- **KVA Code**	C	**Starting Current**	7.73 A
Service Factor (S.F.)		1	**No-load Current**	1.08 A
NEMA Nom. Eff.	66 **Power Factor**	95	**Line-line Res. @ 25ºC**	11.494 Ω A Ph 4.1333 Ω B Ph
Rating - Duty		40C AMB-CONT	**Temp. Rise @ Rated Load**	48°C

Load Characteristics 230 V, 60 Hz, 0.5 HP

% of Rated Load	**25**	**50**	**75**	**100**	**125**	**150**
Power Factor	97	98	98	100	99	99
Efficiency	30.4	48.7	60.2	67.6	68.3	68.3
Speed	1183.7	1171.4	1156.5	1132	1095.1	1095.1
Line amperes	1.4	1.73	2.06	2.43	3	3

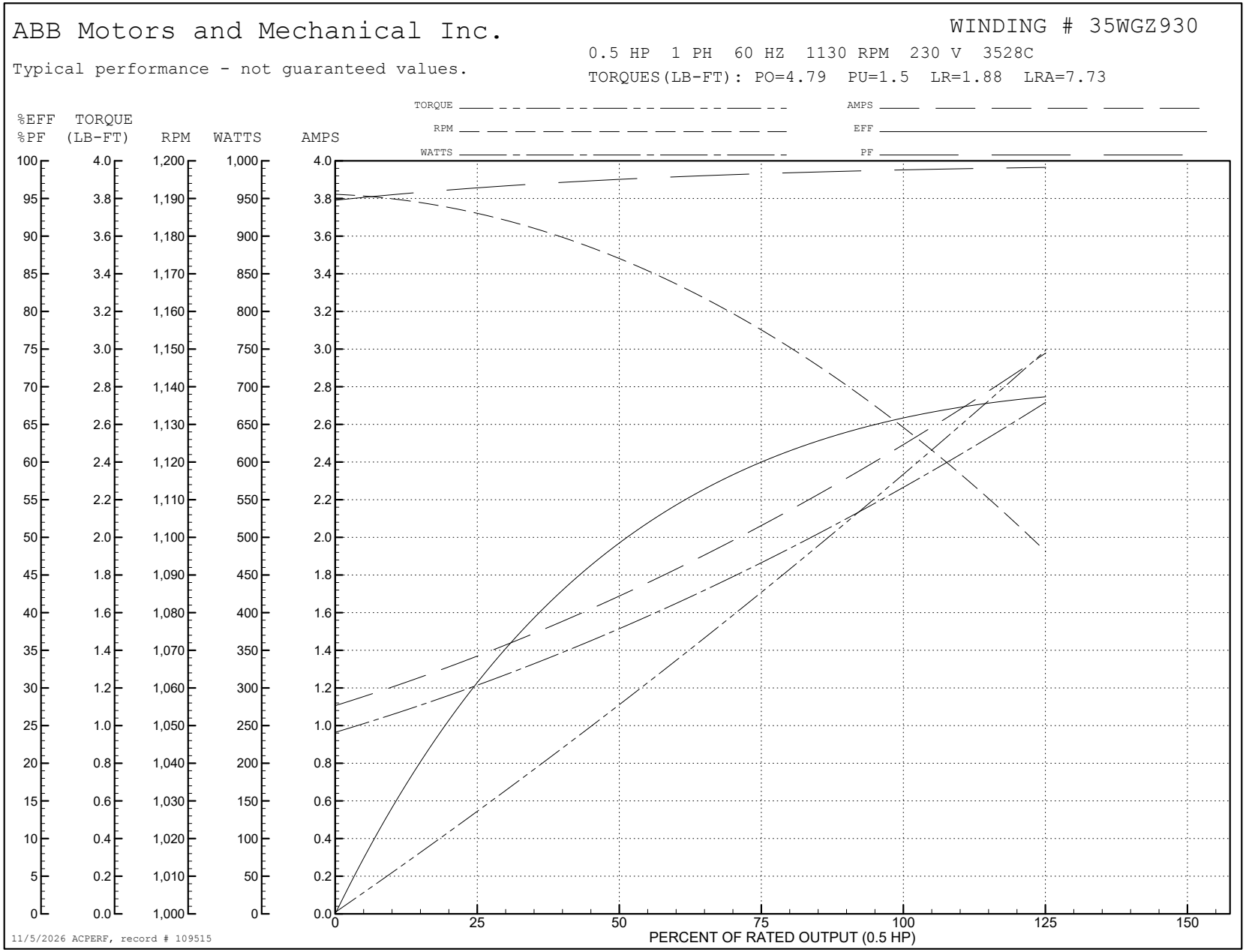
ABB Motors and Mechanical Inc.
WINDING # 35WGZ930
Typical performance - not guaranteed values.
0.5 HP 1 PH 60 HZ 1130 RPM 230 V 3528C
TORQUES(LB-FT): PO=4.79 PU=1.5 LR=1.88 LRA=7.73
TORQUE
RPM
WATTS
AMPS
EFF
PF
%EFF %PF
TORQUE (LB-FT)
RPM
WATTS
AMPS
PERCENT OF RATED OUTPUT (0.5 HP)
11/5/2026 ACPERF, record # 109515

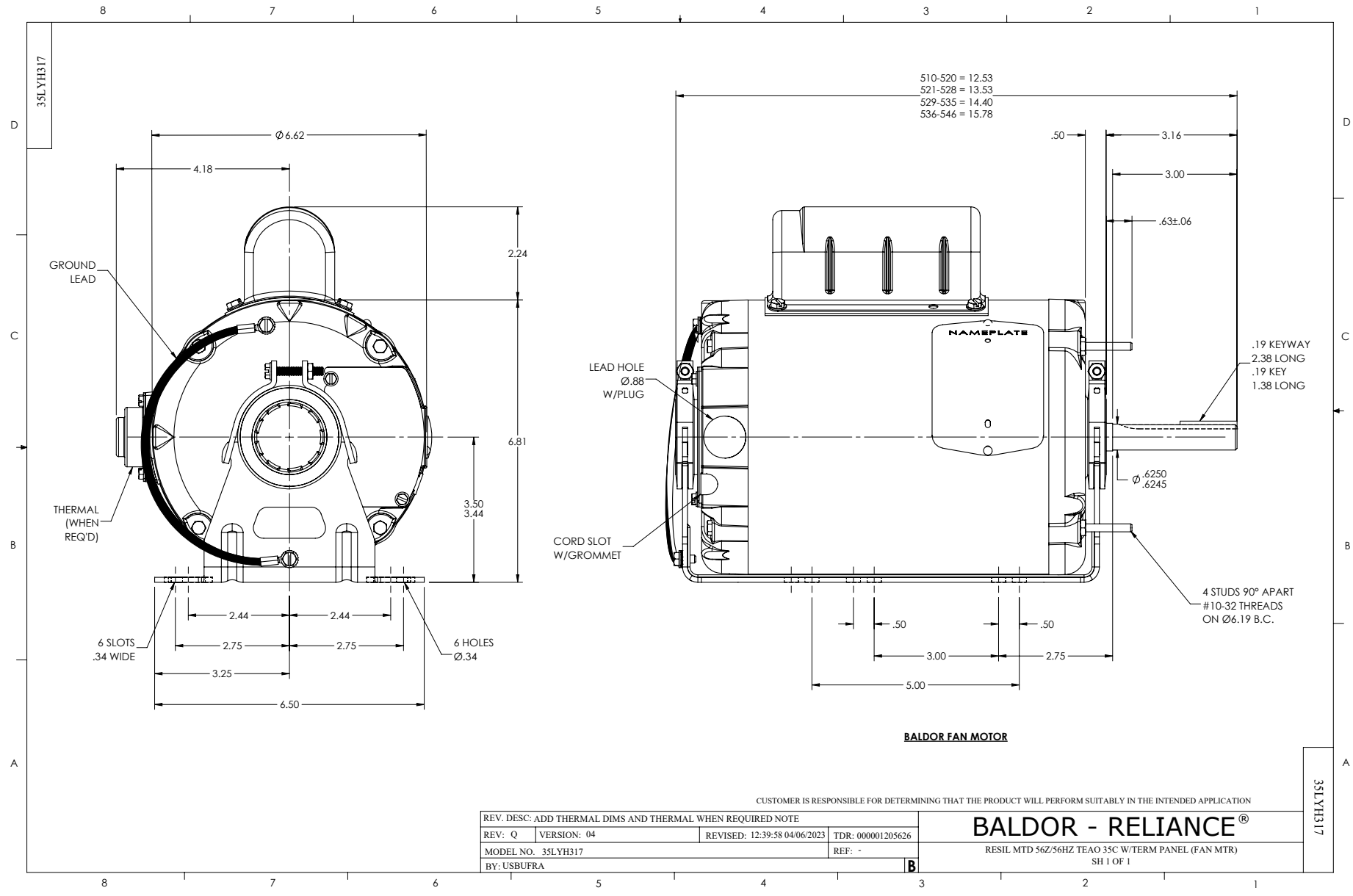
35LYH317
Ø6.62
4.18
2.24
6.81
3.50
3.44
GROUND LEAD
THERMAL (WHEN REQ'D)
6 SLOTS .34 WIDE
6 HOLES Ø.34
2.44
2.44
2.75
2.75
3.25
6.50
510-520 = 12.53
521-528 = 13.53
529-535 = 14.40
536-546 = 15.78
.50
3.16
3.00
.63±.06
NAMEPLATE
LEAD HOLE Ø.88 W/PLUG
CORD SLOT W/GROMMET
.19 KEYWAY
2.38 LONG
.19 KEY
1.38 LONG
Ø .6250 .6245
4 STUDS 90° APART #10-32 THREADS ON Ø6.19 B.C.
.50
.50
3.00
2.75
5.00
BALDOR FAN MOTOR
CUSTOMER IS RESPONSIBLE FOR DETERMINING THAT THE PRODUCT WILL PERFORM SUITABLY IN THE INTENDED APPLICATION
REV. DESC: ADD THERMAL DIMS AND THERMAL WHEN REQUIRED NOTE
REV: Q
VERSION: 04
REVISED: 12:39:58 04/06/2023
TDR: 000001205626
MODEL NO. 35LYH317
REF: -
BY: USBUFRA
B
BALDOR - RELIANCE®
RESIL MTD 56Z/56HZ TEAO 35C W/TERM PANEL (FAN MTR)
SH 1 OF 1
35LYH317

CD0381

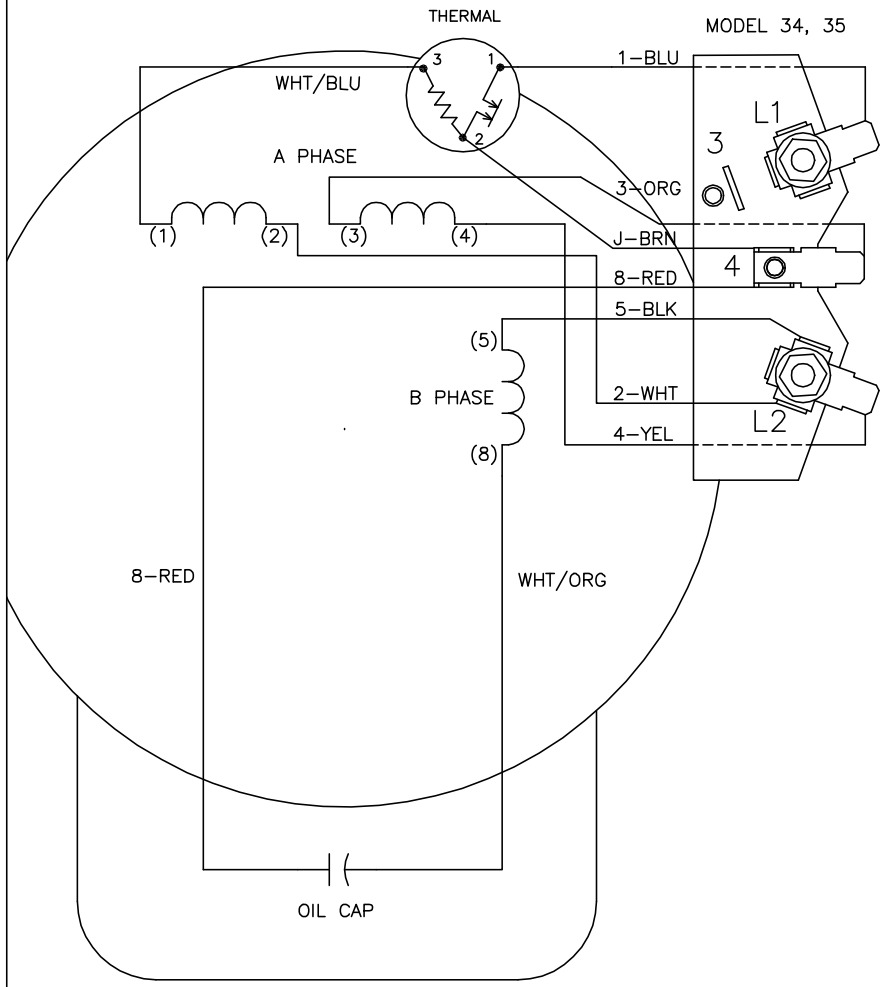

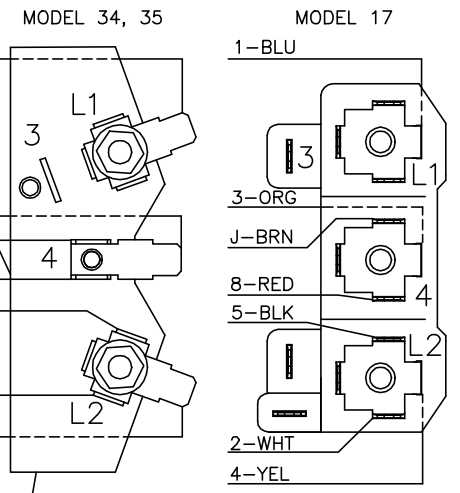

NOTES:

1. CONNECT LINE LEADS TO L1 AND L2.
   LOW VOLTAGE: CONNECT AS SHOWN.
   HIGH VOLTAGE: MOVE LEAD J TO TERM. 3.
   MOVE LEAD 2 TO TERM. 4.
2. CONNECTIONS ARE SHOWN FOR STANDARD ROTATION (CCW FACING END OPPOSITE SHAFT EXTENSION). INTERCHANGE LEADS 5 AND 8 TO REVERSE ROTATION.
3. MULTIPLE CAPACITORS ARE CONNECTED IN PARALLEL UNLESS OTHERWISE SPECIFIED.
4. LEAD COLORS ARE OPTIONAL. LEADS MUST ALWAYS BE NUMBERED AS SHOWN.

CD0381

REV. DESC: REMOVE OPTIONAL THERMAL CONNECTION			BALDOR ELECTRIC Co.
REV. LTR: F	VERSION: 01	TDR: 000000373051	
CD0381	FILE: \AAA\00007\119	REVISED: 08:56:57 09/08/2005	TYPE C, DV, REV, THERMAL, TERMINAL PLATE
	MTL: –	BY: ENJOEP0	