marathon®

# General Purpose Motors

**Model No:** 141289.00
**Catalog No:** 141289.00

General Purpose Motor, 7.50 HP, 3 Ph, 60 Hz, 200/400 V, 1800 RPM, 213T Frame, TEFC

©2026 Marathon, All Rights Reserved.

marathon®

# Product Information Packet: Model No: 141289.00, Catalog No: 141289.00 General Purpose Motor, 7.50 HP, 3 Ph, 60 Hz, 200/400 V, 1800 RPM, 213T Frame, TEFC

## Nameplate Specifications

| | | | |
|---|---|---|---|
| Phase | **3** | Output HP | **7.50 Hp** |
| Output KW | **5.6 kW** | Voltage | **200/400 V** |
| Speed | **1765 r/min** | Synchronous RPM | **1800 r/min** |
| Service Factor | **1.15** | Frame | **213T** |
| Enclosure | **Totally Enclosed Fan Cooled** | Thermal Protection | **No Protection** |
| Efficiency | **91.7 %** | Ambient Temperature | **40 °C** |
| Frequency | **60 Hz** | Current | **22.6/11.3 A** |
| Power Factor | **78.3** | Duty | **Continuous** |
| Insulation Class | **F** | Design Code | **B** |
| KVA Code | **H** | Drive End Bearing Size | **6307** |
| Opp Drive End Bearing Size | **6206** | UL | **Recognized** |
| CSA | **Y** | CE | **Y** |
| IP Code | **43** | Number of Speeds | **1** |

## Technical Specifications

| | | | |
|---|---|---|---|
| Electrical Type | **Squirrel Cage Induction Run** | Starting Method | **Across The Line** |
| Poles | **4** | Rotation | **Reversible** |
| Resistance Main | **1.18 O** | Mounting | **Rigid Base** |
| Motor Orientation | **Horizontal** | Drive End Bearing | **Ball** |
| Opp Drive End Bearing | **Ball** | Frame Material | **Rolled Steel** |
| Shaft Type | **T** | Overall Length | **18.73 in** |
| Frame Length | **9.65 in** | Shaft Diameter | **1 3/8 in** |
| Shaft Extension | **3.38 in** | Assembly/Box Mounting | **F1/F2 Capable** |

## Drawings

| | | | |
|---|---|---|---|
| Connection Drawing | **EE7308** | Outline Drawing | **SS86560-965** |

This is an uncontrolled document once printed or downloaded and is subject to change without notice. Date Created: 13/10/2026

Uncontrolled Copy

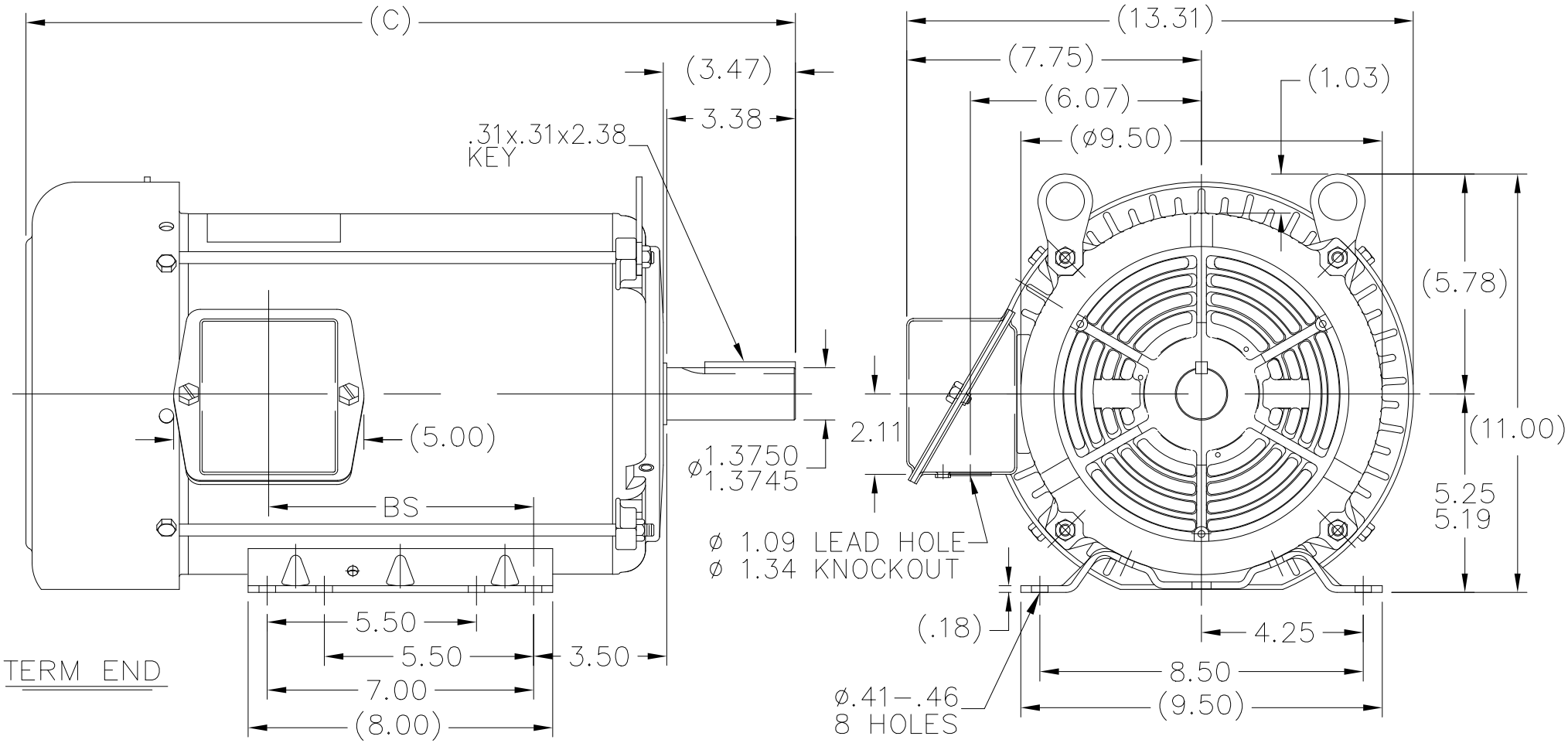


| DASH | FR. | C | BS | MOUNTING |
|---|---|---|---|---|
| 965 | 213/15T | 18.73 | 5.43 | |
| 1115 | 213/15T | 20.23 | 6.93 | |
| 1240 | 213/15T | 21.48 | 8.18 | F1 ONLY |

NOTES:
1. NAMEPLATE TO BE READ FROM C'BOX SIDE OF MOTOR.
2. BOX CAN BE MOUNTED IN 90° STEPS.
3. BOX CAN BE MOUNTED ON OPPOSITE SIDE BY REMOVING BRACKETS AND TURNING FRAME 180°. (EXCEPT AS NOTED.)

| DRAWING REVISION | REVISION BY | REV DATE/ © DATE |
|---|---|---|
| K | SB | 04/22/2026 |
| REQUEST NUMBER | APPROVED BY | DATE |
| CR-0026044 | RMS | 04/22/2026 |

REQUEST NUMBER DESCRIPTION
DRAWING TITLE BLOCK UPDATED

COPYRIGHT (PER REVISION DATE) MARATHON ELECTRIC, LLC. ALL RIGHTS RESERVED. PROPRIETARY AND CONFIDENTIAL INFORMATION - THIS DOCUMENT IS THE PROPERTY OF MARATHON ELECTRIC, LLC. ("OWNER") AND CONTAINS OWNER'S PROPRIETARY INFORMATION. ANY PERSON, CORPORATION OR OTHER FIRM RECEIVING IT IS DEEMED, BY RECEIVING IT, TO AGREE THAT IT, AND/OR ANY PART OF IT, SHALL NOT BE DISCLOSED TO ANY PERSON, CORPORATION OR OTHER ENTITY, DUPLICATED, AND/OR USED, EXCEPT AS EXPRESSLY APPROVED IN WRITING IN ADVANCE BY OWNER. THIS DOCUMENT SHALL BE RETURNED TO OWNER UPON REQUEST. IT MAY BE SUBJECT TO CERTAIN RESTRICTIONS UNDER APPLICABLE EXPORT CONTROL LAWS AND REGULATIONS.

TOLERANCES (EXCEPT AS NOTED):

| DEC. | INCH | mm | ANGLE |
|---|---|---|---|
| .X | ±0.1 | [±3] | ±7' 30" |
| .XX | ±0.03 | [±0.8] | |
| .XXX | ±0.005 | [±0.13] | |
| .XXXX | ±0.0005 | [±0.013] | |

REMOVE BURRS & BREAK SHARP EDGES: .003/.015 [.08/.38] X 45 °
CORNER FILLETS: R.02 [.5]
MACHINED SURFACES: 200 INCH / 5.1 mm
mm DIMENSIONS IN [BRACKETS] ARE FOR REFERENCE ONLY

| DRAWN BY | DESCRIPTION |
|---|---|
| DA | OUTLINE |
| DATE | 210 FR - BB -TS - TEFC - R/S |
| 08/26/1994 | |
| APPROVED BY | |
| DRN | |
| DATE | |
| 08/29/1994 | |
| REFERENCE | MATERIAL / PROCESS/FINISH |
| THIRD ANGLE PROJECTION | SIZE A / DRAWING NUMBER SS86560 / SHEET 1 OF 1 |

marathon™

3 of 3