EVO | Integrated Solar Street Light - 80W

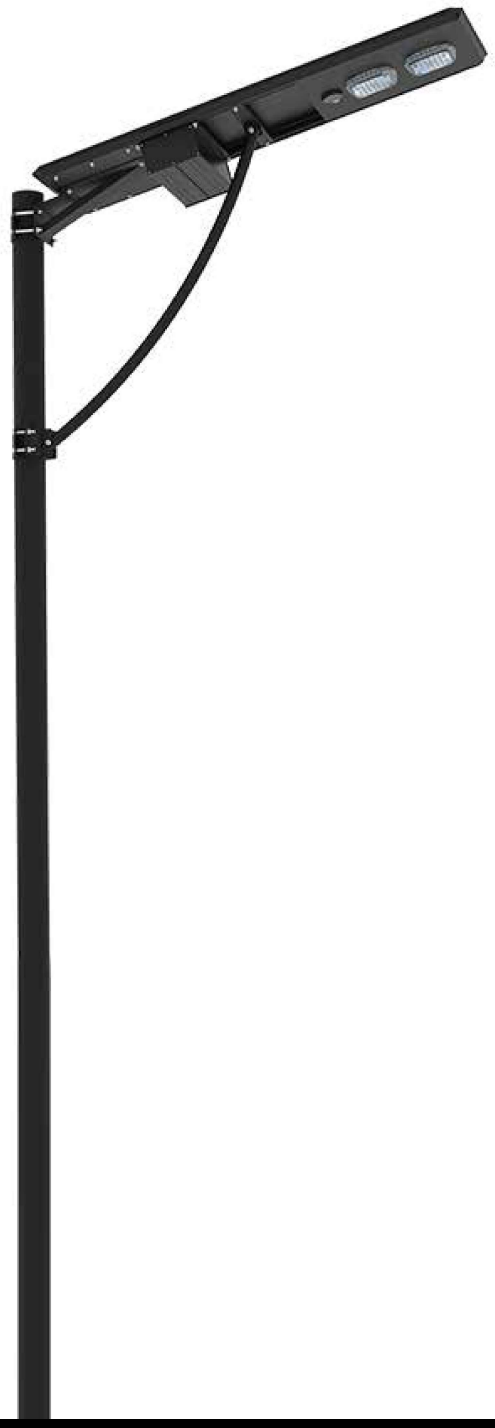

Our EVO line offers an all-in-one solar street light system with easy installation and operation. It includes a versatile bracket that fits any square or round pole. Ideal for area lighting, it features a high-performance Lithium iron phosphate battery, a mono solar panel, and LEDs delivering 196 lumens per watt. Advanced motion sensors enhance energy savings by adjusting brightness based on movement. With a robust design and a 5-year warranty, Our EVO line is a cost-effective and reliable choice for various solar lighting projects, balancing high quality with budget considerations.

NOMINAL FLUX.....15680 LUMENS
NOMINAL POWER.....80 WATTS

LIGHTING

Efficiency.....196 Lumens/Watts
Chips LED.....**PHILIPS** Luxeon 30-30
LED lifetime.....Over 100 000 hours LM80
Optics/CCT.....TII-S / 2300 to 6500K
Recommended Installation Height.....From 16.4 to 22.9 feet

BATTERY

Technology.....Lithium Iron Phosphate LIFEPO4
Capacity.....655 Wh
Autonomy.....Over 24 hours at full charge - 4 Rainy Days back up
Charging time.....5-6 hours
Lifespan.....Over 5000 CYCLES @ 50% DOD over 10 years Lifetime
Working temp.....14°F to 158 °F - (optional -40°F TO 158 °F)

ENERGY

Solar panel.....105 Watts /18V
Cells type.....Monocrystaline Panel Grade A 25 years
Certificates.....IEC 61215 - IEC 61730 I and II - IEC 60904

ELECTRONIC

Controller.....MPPT SMART CONTROLLER (SOLUX BRIDGE optional)
Sensor.....Microwave 360° Motion Sensor
Cabling.....Waterproof Connector, Plug and Play
Protection.....Battery Management System (BMS)

MECHANICAL

Pole mounting.....3.5 - 2.9 Inches
Material.....Aluminium and Stainless Steel

DIMENSIONS

Product.....49.1 x 17.3 x 9.7 Inches
Carton size.....51.7 x 19.6 x 10.4 Inches
Net Weight.....36.1 Lbs
Gross Weight.....44.7 Lbs
Qty /Ctn 20"/40".....175/414

Model Number.....**AVS-EVO-80W**
SKU.....**789660**

Beyond Solar retains the right to modify or change product specifications without prior notice, as part of our ongoing commitment to improvement.

Bike Paths | **Hiking Trails** | **Car Parks & Rest Areas** | **Main Roads** | **Pathways & Alleys** | **Campsites**

CERTIFICATIONS > IEC / TUV / EMC / LM-79- 08 and LM-80 test standards / IK8 / IP65 / CE / ULOR

Beyond Solar offers a 5 Year Limited Warranty for the EVO-Series luminaire shall be free from defects in material and workmanship for up to five (5) years from date of shipment. This limited warranty covers all components when installed and operated according to Beyond Solar instructions. Fixture suitable for ambient temperature from 14° to 122°. PV Panels - 20 year performance warranty Controller & Batteries : 5 years

5 Year Limited Warranty

LUMINAIRE
HOUSING & LEDS

15680 LUMENS - 2300 TO 6500 K



High pressure die-cast low-copper aluminum. **Protection class (IP65)**. Beyond Solar uses a high quality Polyester Powder Coating from **AKZO NOBEL**. This powder coating provides an excellent salt and humidity resistance as well as ultra violet resistance for color retention for this product.

Our Luminaire is equipped with **PHILIPS LUXEON HE PLUS** High efficiency Chips offering and overall **196 Lumens per Watt efficacy**.

Our luminaire also complies with the **DARK SKY** requirement for light pollution with an **Upward lighting of 0,71%**.

IP65

LUXEON BY PHILIPS LUMILEDS

LED 3030	LED QTY (Pcs) 2x40	LENS (Pcs) 4	CRI > 80

EVO OPTICS

LIGHT DISTRIBUTION

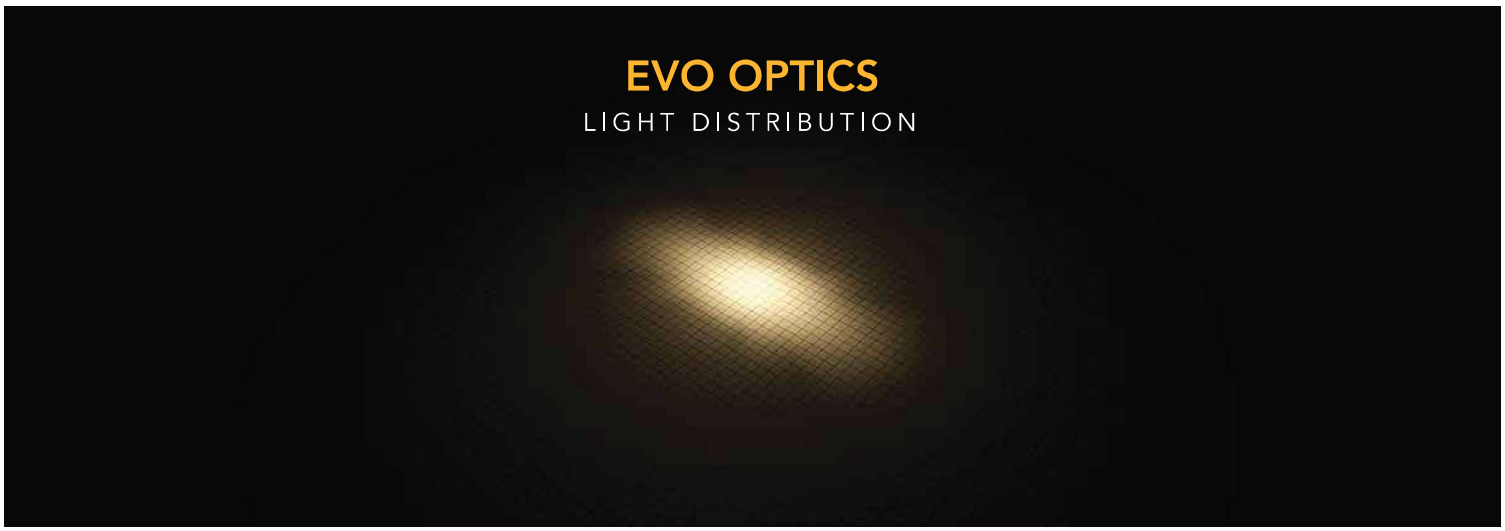

LIGHT DISTRIBUTION CURVES

AVERAGE BEAM ANGLE (50%) : **91,2 DEG**

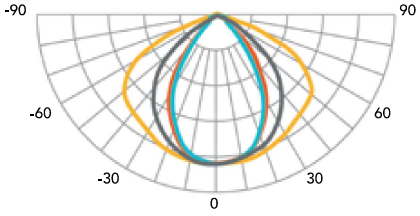

- C0/180,129.4°
- C30/210,96.3°
- C60/240,72.7°
- C90/270,66.4°

BATTERY **LIFEPO4**

The **EVO** line utilizes advanced **Iron Phosphate Lithium LiFePo4** battery.

This leading solar technology offers **over 5000 cycles at 50% DOD**, ensuring a robust **lifespan exceeding 10 years**. It combines reliability with efficiency, aligning with our budget-friendly yet high-quality PERFORMANCE range.

EXTREME TEMPERATURE
14 °F TO 158 °F (-40 °F OPTIONAL)

When Standard Lithium LiFePo4 batteries enjoy a working temperature range from 14°F TO 158°F. Beyond Solar **offers as optional** a new Special LIFEPO4 battery with working range of **-40 °F. to 158 °F.**

EASY MAINTENANCE & ANTI THEFT SCREWS

Easy and direct access to the battery casing for maintenance. The fixation are made with anti theft screws, which request special tooling to unscrew.



OVER **10** YEARS LIFETIME

ALUMINUM WATERPROOF CASING & NATURAL AIRFLOW

High temperatures greatly negatively affect the battery's lifespan. This is why our batteries are **encapsulated in an aluminum waterproof casing** for a perfect heat dissipation.

In addition to that, the casing enjoys a natural airflow which **keeps the battery to ambient temperature.**

BMS ELECTRONIC PROTECTION BATTERY MANAGEMENT SYSTEM

Our batteries are equipped with **electronic circuit boards for a higher protection**, ensuring battery functioning optimization no matter the situation.

THE BMS PROTECTS AGAINST • OVER/UNDER CURRENT • OVERLOAD • OVER/UNDER VOLTAGE • OVER/UNDER CHARGE • TEMPERATURE MANAGEMENT

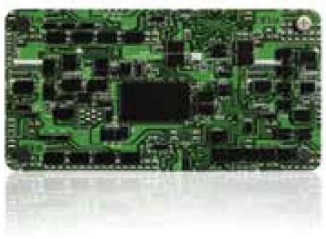

COMPARISON OF DIFFERENT BATTERY TECHNOLOGIES

LIFETIME & CYCLES AT 50% DOD*

Comparisons of different battery technologies



Lead Acid	NimH	Lithium ION	**Lithium LifePO4**
450	**1400**	**1000**	**5000**

CHARGING TEMPERATURE RANGE WITHOUT CAPACITY LOSS

Minimum & Maximum temperature range for Optimal charing during the day

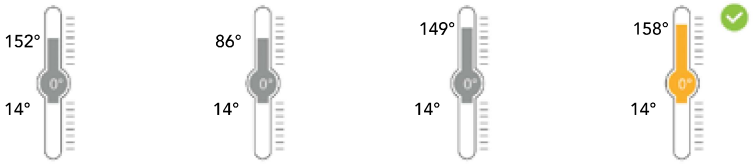

Lead Acid	NimH	Lithium ION	**Lithium LifePO4**

SOLAR **PANEL**

105 WATTS

High efficiency mono-crystalline **Solar panels**. Carefully selected **Grade A** Solar cells. Up to 19.4% efficiency.

Its **octagonal Anodized** aluminium alloy frame gives it a modern and elegant design as well as perfect resistance to corrosion. They are also equipped with fully **waterproof Plug and Play connectors**.



OUR PV PERFORMANCE GUARANTEE

Guarantee module performance

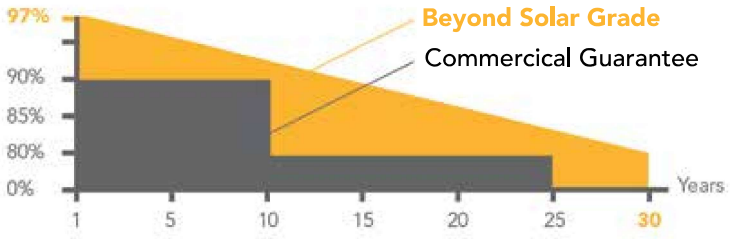

CONTROLLER **MPPT**



WATERPROOF CONNECTORS "PLUG & PLAY"

All our components are assembled **seamless and easy to access**

In a search for performance and reliability, our products are equipped with MPPT technology controller offering the best charging efficiency on the market up to 98%

FEATURES

Minimal stand-by power consumption
Current consumption ≤ 10mA
Intelligent battery management

3 Phases charging:
- Charge MPPTT
- Constant voltage
- Floating voltage

Intelligent LED driver Auto detecting of dusk and dawn for automatic operation, 7 lighting programs configuration.

ANTI BLACK OUT: Load adjust according to battery capacity assuring all night long lighting in any weather conditions.

The controller also acts against:
- OVERLOAD
- OVERCURRENT
- OVERTEMPERATURE
- OVERVOLTAGE / OVERLOAD
- OVERDISCHARGE

REMOTE CONTROL MONITORING

In order to facilitate all maintenance operations and above all to diagnose any possible problem, without having to intervene mechanically on the luminaire, **Beyond Solar luminaires are equipped with a wireless diagnostic system via remote control**.

With a simple click it is possible to have real-time information such as:
- Automatic diagnosis in case of malfunction
- State of charge and battery histor
- Real Time load and solar panel energy production history
- Age of the product and installation
- Temperature and its history



5 Year Limited Warranty

MOTION SENSOR
MICROWAVE

Beyond Solar luminaires are equipped with microwave detectors that use the **Doppler effect** (like car radars) to detect a nearby objects and measure the distance. The sensor emits a high frequency wave to reflect off of and analyze the objects in the vicinity.



Since the microwaves **only detect specific objects**, detection reliability increases resulting in:

- Much better reliability compared to the Infrared detector
- Up to **360°** Directivity
- Insensitivity to **other environmental variations** such as light, color, temperature, etc.

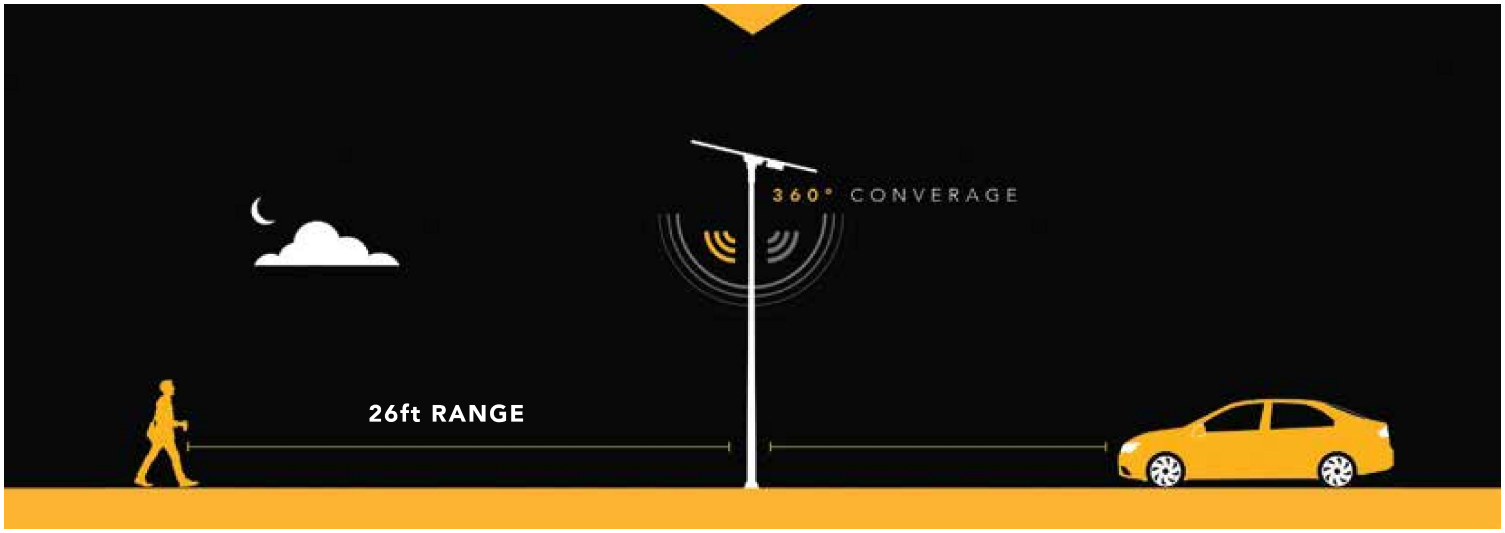

OPERATION MODE & LIGHTING SCHEDULE

In addition to automatic switching on and off , you have the possibility of choosing among different modular operating modes according to the needs of the project

Remote not included with purchase; provided only upon request for custom settings.

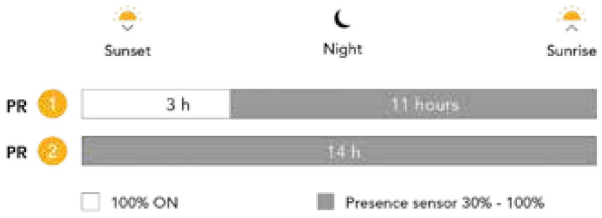

CONTACT US FOR **MORE PROGRAM OPTIONS**

EASY *INSTALLATION*

NO CABLING NO TRENCHING

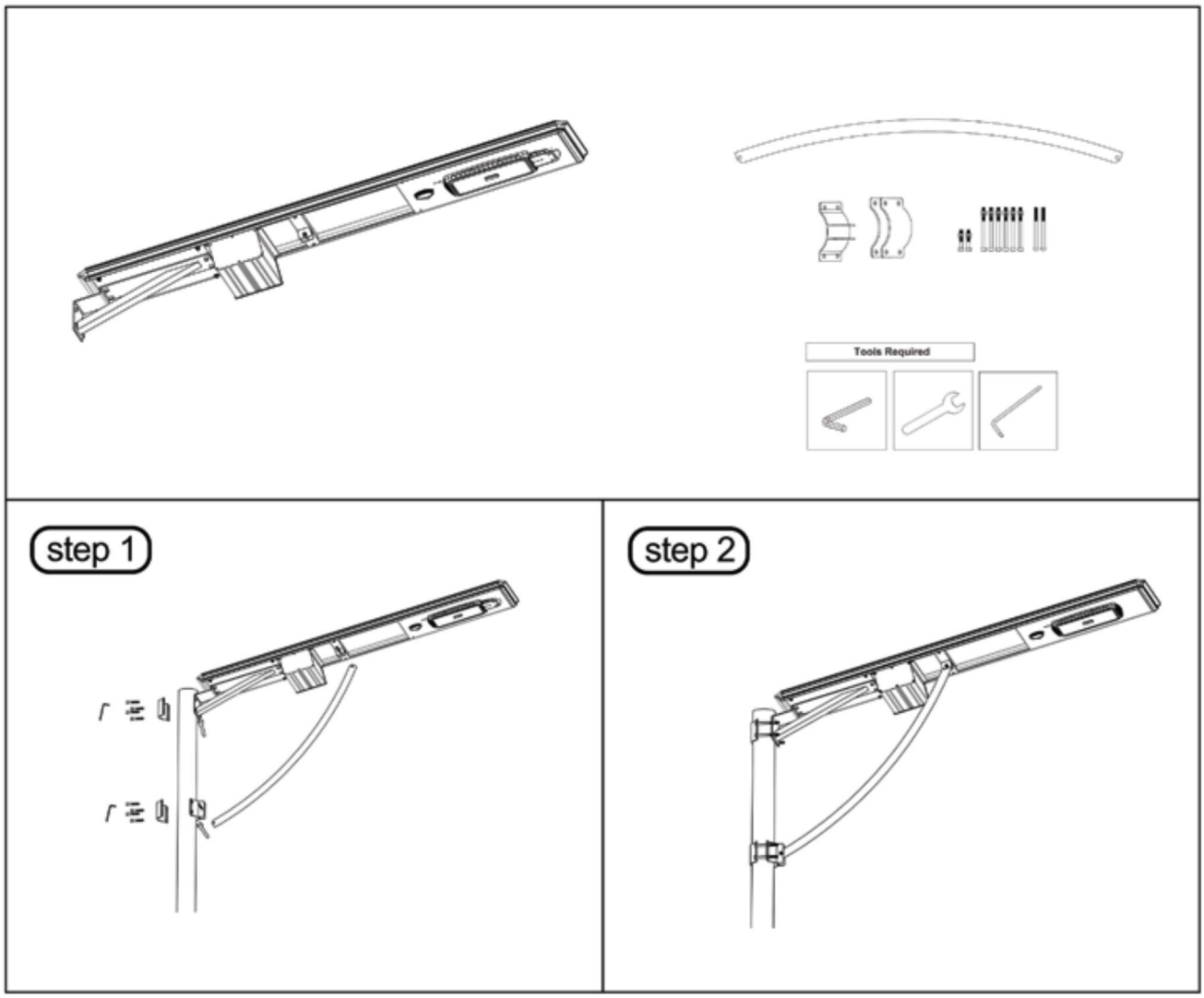

With a well designed bracket support, **EVO** is effortless and flexible to install.

ORIENTATE & CHOOSE YOUR TILT

DIMENSIONS*

SOLAR PANEL & LED

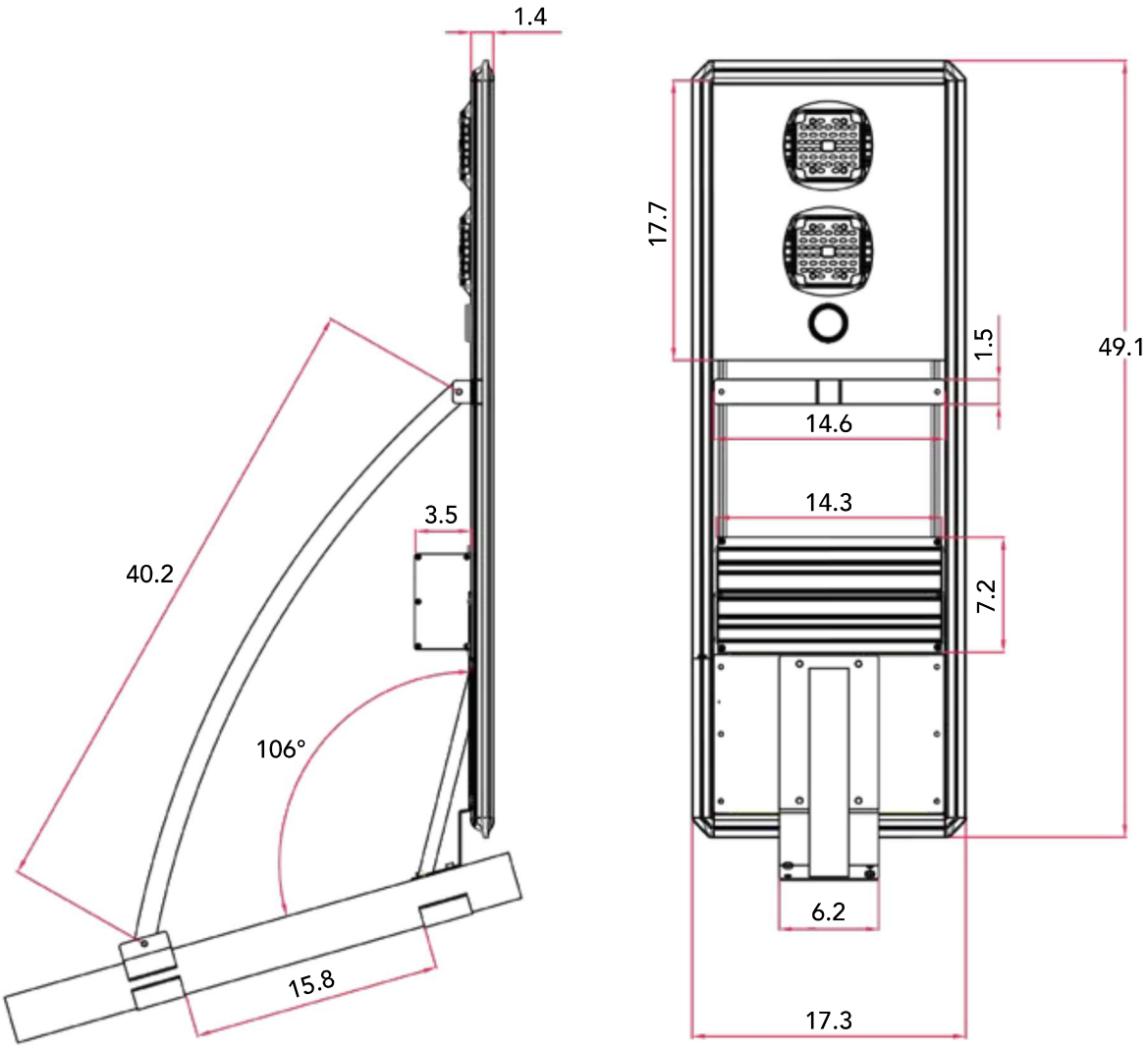

*All dimensions are in inches