ABB BALDOR RELIANCE

Customer information packet

EJMM3559T

3HP, 3450RPM, 3PH, 60HZ, 3532M, N
Class - None
Division - Not Applicable

Copyright © All product information within this document is subject to ABB Motors and Mechanical Inc. copyright © protection, unless otherwise noted.
11/5/2026 5:07:02 PM

Specifications

Enclosure	TEFC
Frame	145JM
Frame Material	Steel
Frequency	60.00 Hz
Haz Area Class and Group	None
Haz Area Division	Not Applicable
Motor Letter Type	Three Phase
Output @ Frequency	3.000 HP @ 60 HZ
Phase	3
Synchronous Speed @ Frequency	3600 RPM @ 60 HZ
Voltage @ Frequency	460.0 V @ 60 HZ
	230.0 V @ 60 HZ
Agency Approvals	CSA
	CSA EEV
	UR
Ambient Temperature	40 °C
Auxiliary Box	NO AUXILLARY BOX
Auxiliary Box Lead Termination	None
Base Indicator	Rigid
Bearing Grease Type	Polyrex EM (-20F +300F)
Blower	None
Current @ Voltage	7.200 A @ 230.0 V
	7.900 A @ 208.0 V
	3.600 A @ 460.0 V
Design Code	B
Drip Cover	No Drip Cover
Duty Rating	CONT
Efficiency @ 100% Load	86.5 %
Electrically Isolated Bearing	Not Electrically Isolated
Feedback Device	NO FEEDBACK
Front Face Code	Standard
Front Shaft Indicator	None

Part Detail

Revision	V
Type	AC
Mech. spec.	35T921
Base	
Status	PRD/A
Elec. spec.	35WGQ060
Layout	35LYT921
Eff. date	01-12-2026
CD Diagram	CD0005
Poles	02
Leads	9#18
Proprietary	False
Created date	04-29-2010

Heater Indicator	No Heater
High Voltage Full Load Amps	3.6 a
Insulation Class	F
Inverter Code	Inverter Ready
KVA Code	L
Lifting Lugs	No Lifting Lugs
Locked Bearing Indicator	Locked Bearing
Motor Lead Exit	Ko Box
Motor Lead Quantity/Wire Size	9 @ 18 AWG
Motor Lead Termination	Flying Leads
Motor Standards	NEMA
Motor Type	3532M
Mounting Arrangement	F1
Number of Poles	2
Overall Length	16.29 IN
Power Factor	92
Product Family	General Purpose
Pulley End Bearing Type	Ball
Pulley Face Code	C-Face
Pulley Shaft Indicator	Tapped & Key
Rodent Screen	None
RoHS Status	ROHS COMPLIANT
Service Factor	1.15
Shaft Diameter	0.875 IN
Shaft Extension Location	Pulley End
Shaft Ground Indicator	No Shaft Grounding
Shaft Rotation	Reversible
Shaft Slinger Indicator	Shaft Slinger
Speed	3450 rpm
Speed Code	Single Speed
Starting Method	Direct on line
Thermal Device - Bearing	None
Thermal Device - Winding	None
Vibration Sensor Indicator	No Vibration Sensor

Winding Thermal 1	None
Winding Thermal 2	None

Nameplate

NP3441LUA									
CAT.NO.	EJMM3559T								
SPEC	35T921Q060G1								
HP	3								
VOLTS	230/460								
AMPS	7.2/3.6								
RPM	3450								
FRAME	143JM	**HZ**	60		**PH**	3			
SF	1.15	**CODE**	L	**DES**	B	**CLASS**	F		
NEMA NOM. EFF	86.5	**PF**	92						
RATING	40C AMB-CONT								
CC	010A								
ENCL	TEFC	**SER**							
DE	6206	**ODE**	6203						
VPWM INVERTER READY	SFA 8.2/4.1								
CT6-60H(10:1)VT3-60H(20:1									
	50Hz 3HP 190/380V 8.8/4.4A								SF1.0

AC Induction Motor Performance Data
Record # 50261
Typical performance - not guaranteed values

Winding: 35WGQ060-R002	**Type:** 3532M	**Enclosure:** TEFC

Nameplate Data				**460 V, 60 Hz: High Voltage Connection**	
Rated Output (HP)			3	**Full Load Torque**	4.5 LB-FT
Volts			230/460	**Start Configuration**	direct on line
Full Load Amps			7.2/3.6	**Breakdown Torque**	18 LB-FT
R.P.M.			3450	**Pull-up Torque**	11 LB-FT
Hz	60	**Phase**	3	**Locked-rotor Torque**	16 LB-FT
NEMA Design Code	B	**KVA Code**	L	**Starting Current**	33 A
Service Factor (S.F.)			1.15	**No-load Current**	1.2 A
NEMA Nom. Eff.	86.5	**Power Factor**	92	**Line-line Res. @ 25ºC**	4.72 Ω
Rating - Duty			40C AMB-CONT	**Temp. Rise @ Rated Load**	61°C
S.F. Amps				**Temp. Rise @ S.F. Load**	76°C

Load Characteristics 460 V, 60 Hz, 3 HP

% of Rated Load	**25**	**50**	**75**	**100**	**125**	**150**	**S.F.**
Power Factor	62	81	88	92	93	94	93
Efficiency	83.7	87.9	88.2	87.2	85.6	83.5	86.2
Speed	3562	3531	3498	3462	3421	3375	3437
Line amperes	1.5	2.1	2.8	3.6	4.5	5.4	4.1

ABB Motors and Mechanical Inc.

WINDING # 35WGQ060

3 HP 3 PH 60 HZ 3450 RPM 460 V 3532M

Typical performance - not guaranteed values.

TORQUES(LB-FT): PO=18 PU=11 LR=16 LRA=33

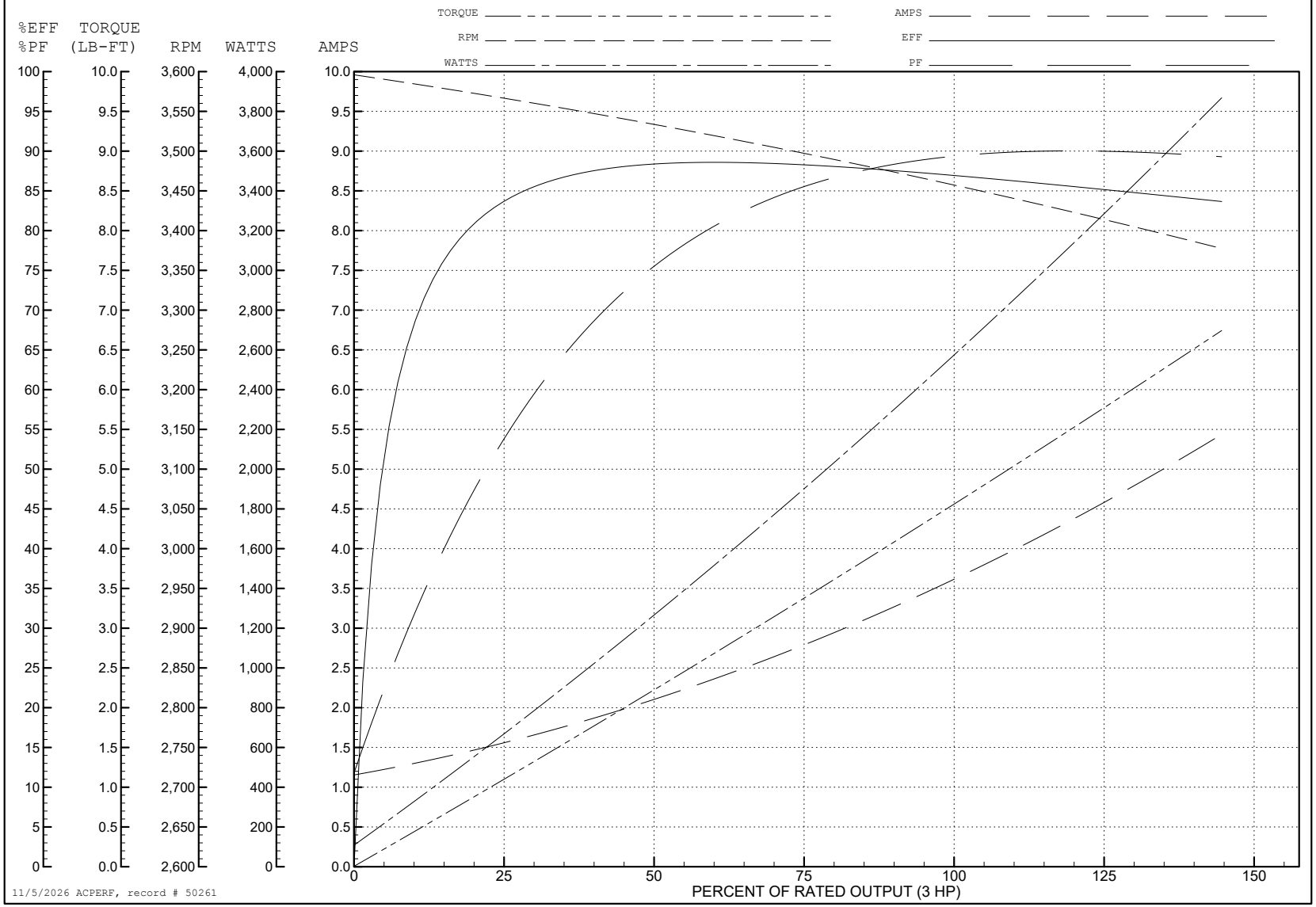

AC Induction Motor Performance Data
Record # 59171
Typical performance - not guaranteed values

Winding: 35WGQ060-R002	**Type:** 3532M	**Enclosure:** TEFC

Nameplate Data				**230 V, 60 Hz: Low Voltage Connection**	
Rated Output (HP)			3	**Full Load Torque**	4.5 LB-FT
Volts			230/460	**Start Configuration**	direct on line
Full Load Amps			7.2/3.6	**Breakdown Torque**	18 LB-FT
R.P.M.			3450	**Pull-up Torque**	11 LB-FT
Hz	60	**Phase**	3	**Locked-rotor Torque**	16 LB-FT
NEMA Design Code	B	**KVA Code**	L	**Starting Current**	66 A
Service Factor (S.F.)			1.15	**No-load Current**	2.4 A
NEMA Nom. Eff.	86.5	**Power Factor**	92	**Line-line Res. @ 25ºC**	1.17 Ω
Rating - Duty			40C AMB-CONT	**Temp. Rise @ Rated Load**	61°C
S.F. Amps				**Temp. Rise @ S.F. Load**	73°C
				Locked-rotor Power Factor	47.1
				Rotor inertia	0.0885 LB-FT2

Load Characteristics 230 V, 60 Hz, 3 HP

% of Rated Load	**25**	**50**	**75**	**100**	**125**	**150**	**S.F.**
Power Factor	57	77	85	88	89	90	89
Efficiency	84.1	87.9	88.4	87.2	85.7	83.5	86.3
Speed	3562	3531	3498	3462	3421	3375	3437
Line amperes	3	4.2	5.6	7.2	9	10.8	8.28

ABB Motors and Mechanical Inc.

WINDING # 35WGQ060

3 HP 3 PH 60 HZ 3450 RPM 230 V 3532M

Typical performance - not guaranteed values.

TORQUES(LB-FT): PO=18 PU=11 LR=16 LRA=66

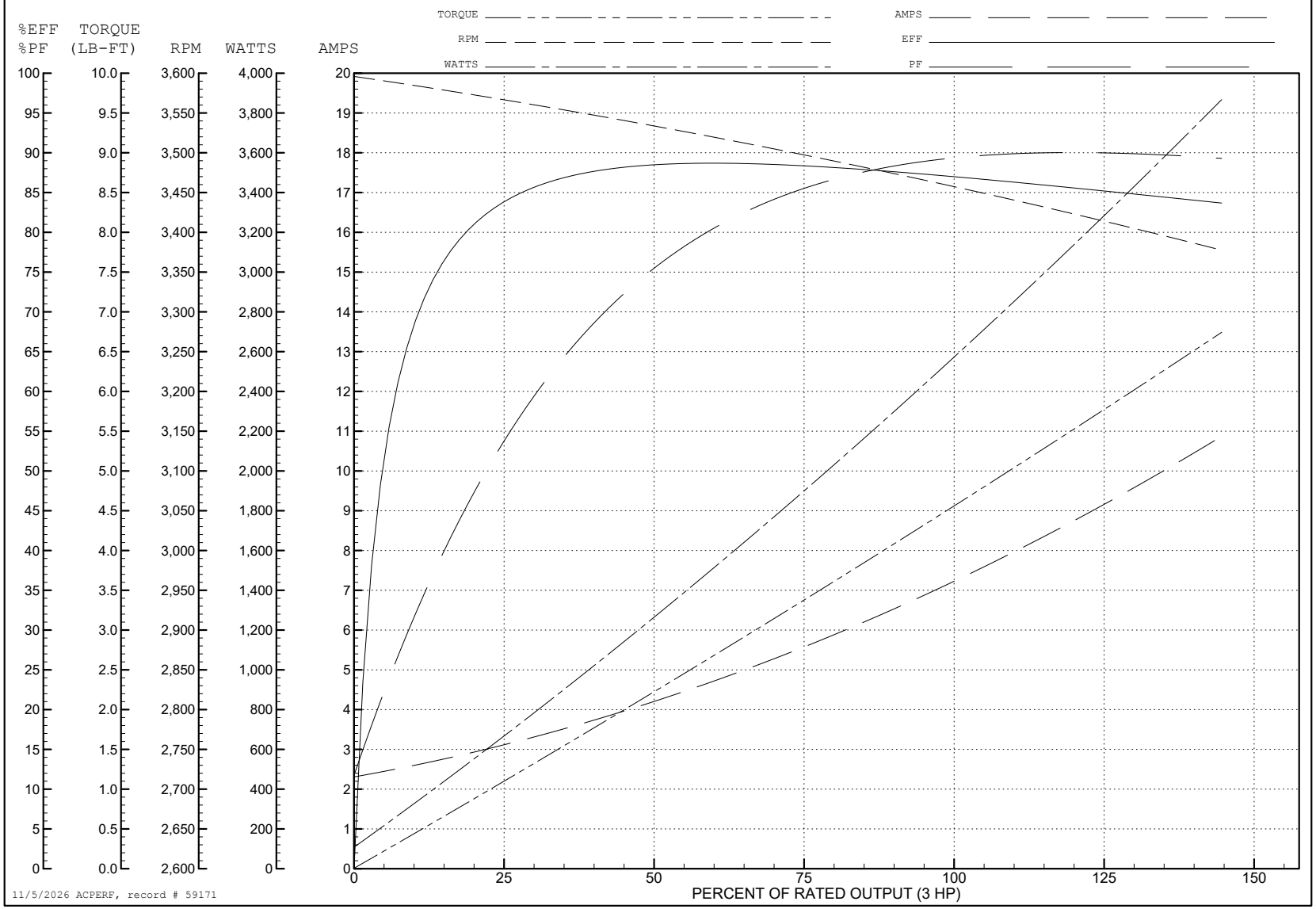

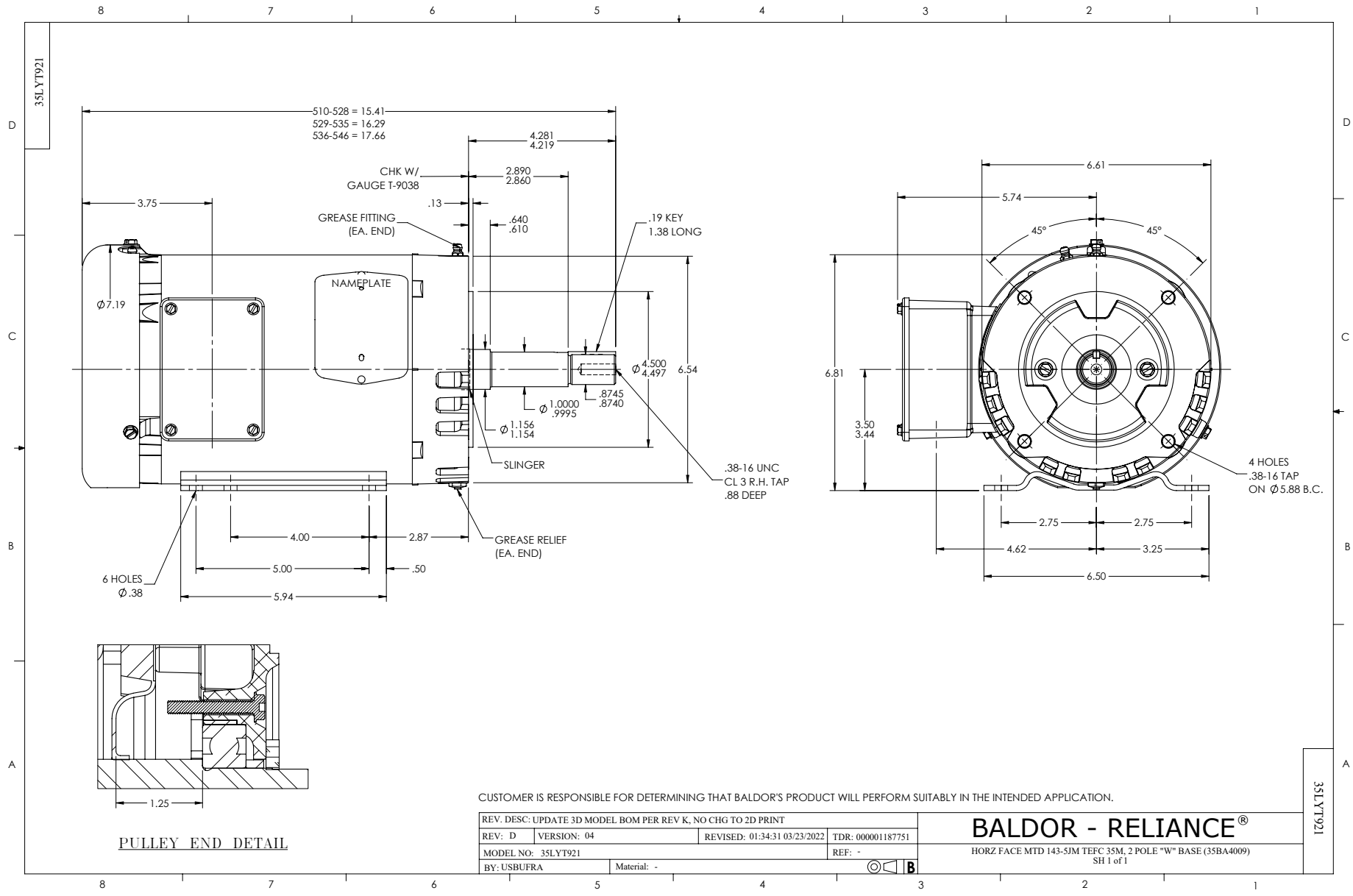
35LYT921
510-528 = 15.41
529-535 = 16.29
536-546 = 17.66
4.281
4.219
CHK W/
GAUGE T-9038
2.890
2.860
3.75
.13
GREASE FITTING
(EA. END)
.640
.610
.19 KEY
1.38 LONG
NAMEPLATE
Ø7.19
Ø 4.500
4.497
6.54
.8745
.8740
Ø 1.0000
.9995
Ø 1.156
1.154
SLINGER
.38-16 UNC
CL 3 R.H. TAP
.88 DEEP
4.00
2.87
GREASE RELIEF
(EA. END)
6 HOLES
Ø .38
5.00
.50
5.94
6.61
5.74
45°
45°
6.81
3.50
3.44
4 HOLES
.38-16 TAP
ON Ø5.88 B.C.
2.75
2.75
4.62
3.25
6.50
1.25
PULLEY END DETAIL
CUSTOMER IS RESPONSIBLE FOR DETERMINING THAT BALDOR'S PRODUCT WILL PERFORM SUITABLY IN THE INTENDED APPLICATION.
REV. DESC: UPDATE 3D MODEL BOM PER REV K, NO CHG TO 2D PRINT
REV: D
VERSION: 04
REVISED: 01:34:31 03/23/2022
TDR: 000001187751
MODEL NO: 35LYT921
REF: -
BY: USBUFRA
Material: -
B
BALDOR - RELIANCE®
HORZ FACE MTD 143-5JM TEFC 35M, 2 POLE "W" BASE (35BA4009)
SH 1 of 1
35LYT921

CD0005

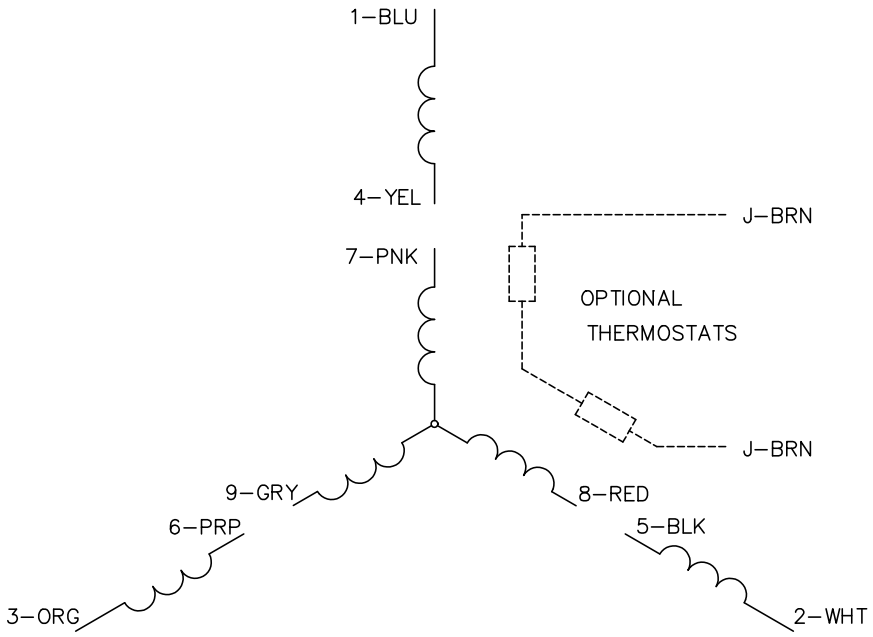

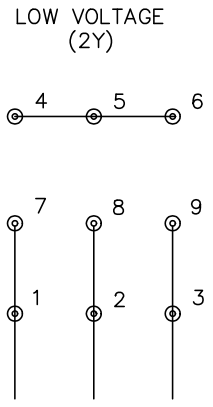

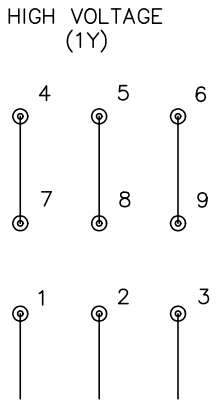

NOTES:

1. INTERCHANGE ANY TWO LINE LEADS TO REVERSE ROTATION.
2. OPTIONAL THERMOSTATS ARE PROVIDED WHEN SPECIFIED.
3. ACTUAL NUMBER OF INTERNAL PARALLEL CIRCUITS MAY BE A MULTIPLE OF THOSE SHOWN ABOVE.
4. LEAD COLORS ARE OPTIONAL. LEADS MUST ALWAYS BE NUMBERED AS SHOWN.

CD0005

REV. DESC: REVISE TO SHOW OPTIONAL COLORS			BALDOR ELECTRIC Co.
REV. LTR: E	BY: JLP	REVISED: 01/19/99 10:15	TDR: 0171435
CD0005		FILE: AAA00005140	MDL: –
		MTL: –	3PH, DV, 9 LEADS