marathon®

Severe Duty Motors

Model No: 184TTFS6844
Catalog No: E473

Severe Duty Motor, 5 HP, 3 Ph, 60 Hz, 230/460 V, 1800 RPM, 184T Frame, TEFC

©2026 Marathon, All Rights Reserved.

marathon®

Product Information Packet: Model No: 184TTFS6844, Catalog No: E473 Severe Duty Motor, 5 HP, 3 Ph, 60 Hz, 230/460 V, 1800 RPM, 184T Frame, TEFC

Nameplate Specifications

Phase	**3**	Output HP	**5 Hp**
Output KW	**3.7 kW**	Voltage	**230/460 V**
Speed	**1755 r/min**	Synchronous RPM	**1800 r/min**
Service Factor	**1.15**	Frame	**184T**
Enclosure	**Totally Enclosed Fan Cooled**	Thermal Protection	**No Protection**
Efficiency	**90.2 %**	Ambient Temperature	**40 °C**
Frequency	**60 Hz**	Current	**12.4/6.2 A**
Power Factor	**83.5**	Duty	**Continuous**
Insulation Class	**F**	Design Code	**B**
KVA Code	**J**	Drive End Bearing Size	**6206**
Opp Drive End Bearing Size	**6205**	UL	**Recognized**
CSA	**Y**	CE	**Y**
IP Code	**54**	Number of Speeds	**1**
Hazardous Location	**DIVISION 2 T2B**		

Technical Specifications

Electrical Type	**Squirrel Cage Inverter Rated**	Starting Method	**Line Or Inverter**
Poles	**4**	Rotation	**Reversible**
Resistance Main	**2.62 O**	Mounting	**Rigid Base**
Motor Orientation	**Horizontal**	Drive End Bearing	**Ball**
Opp Drive End Bearing	**Ball**	Frame Material	**Cast Iron**
Shaft Type	**T**	Overall Length	**16.19 in**
Frame Length	**6.75 in**	Shaft Diameter	**1 1/8 in**
Shaft Extension	**2.78 in**	Assembly/Box Mounting	**F1/F2 Capable**
Inverter Load	**Constant 20:1**		

Drawings

Connection Drawing	**A-EE7308**	Outline Drawing	**A-SS63661-675**

This is an uncontrolled document once printed or downloaded and is subject to change without notice. Date Created: 13/10/2026

SS63661

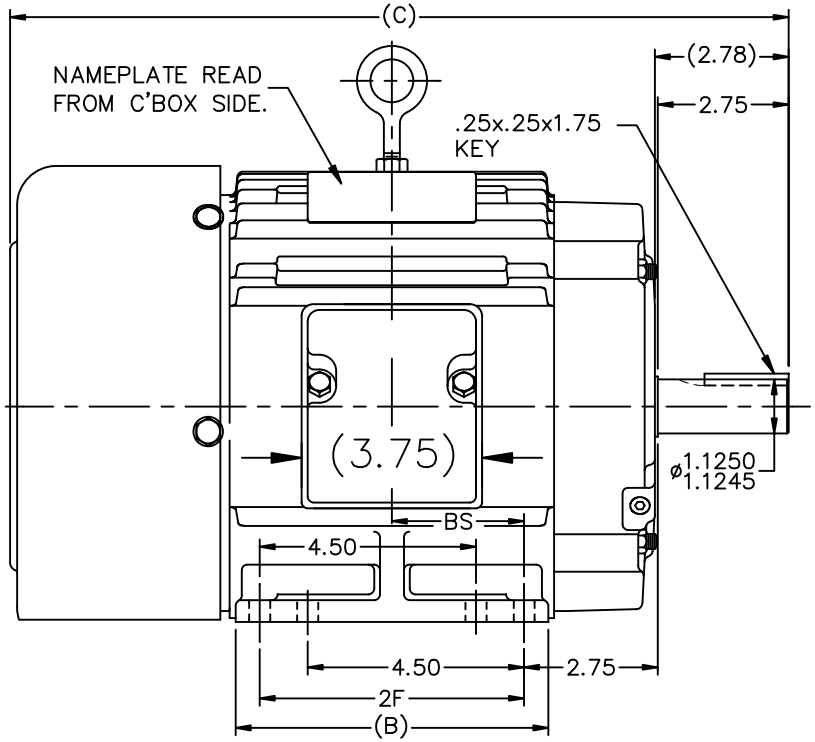

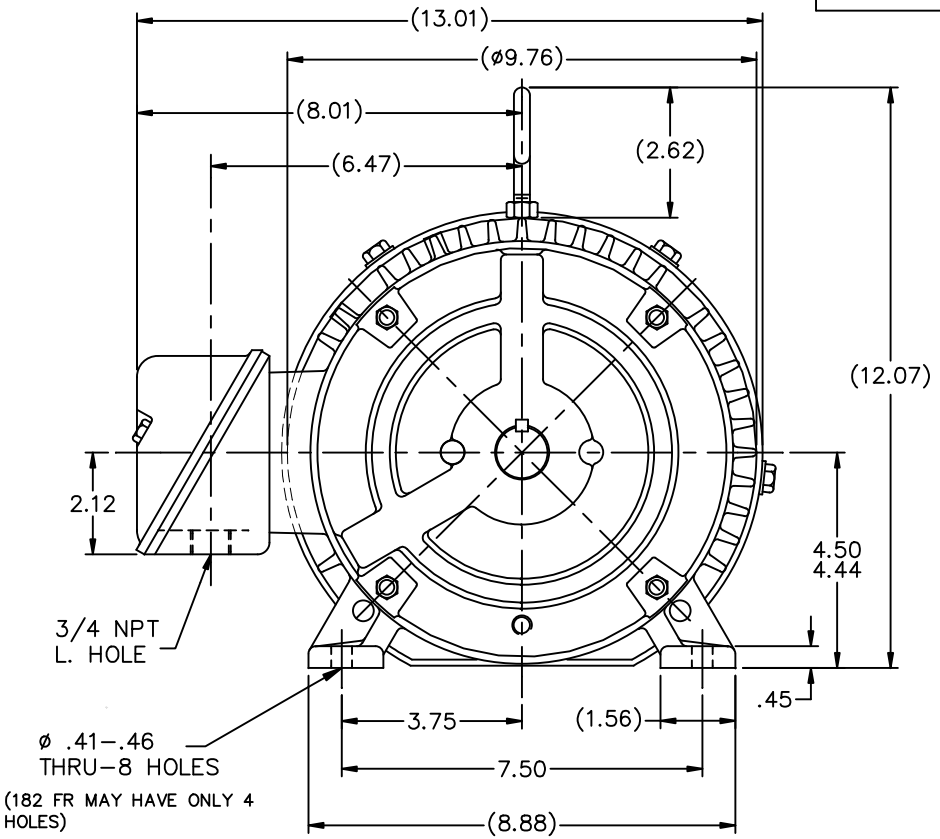

BOX CAN BE MOUNTED ON OPPOSITE SIDE BY REMOVING BRACKETS & TURNING FRAME 180°.

BOX CAN BE ROTATED IN 90° STEPS.

DASH	FR.	C	B	2F	BS
575	182T	15.19	5.50	4.50	2.25
675	184T	16.19	6.50	5.50	2.75
800	184T	17.44	7.75	5.50	3.38

02-15-2011

F2 MTG.

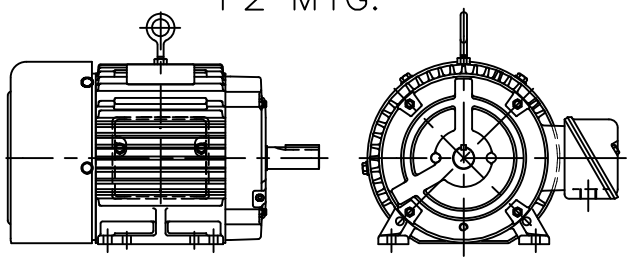

NO.	REVISION	BY & DATE	CHK
13	CHG COND. BOX DIM, WAS 5.00 NOW 3.75 ECN 18821	TF 01/31/2011	EMH
12	REDRAWN IN AUTOCAD	TAT 06-29-2004	ML
11	UPDATED MOUNTING HOLE NOTE CN 26000-581	DRS 01-02-2002	ML
10	ADDED 182 FR. MAY HAV... NOTE CN 26000-581	MRB 07-02-1998	
9	ADDED 4 MOUNTING HOLES	MJD 06-09-1998	
8	ADDED NEMA "O" DIMENSION	MRB 09-12-1996	

TOLERANCES UNLESS SPECIFIED		
DEC.	INCHES	
.X	±.1	
.XX	±.03	
.XXX	±.005	
.XXXX	±.0005	
ANG	±7'30"	

MARATHON ELECTRIC

TITLE OUTLINE
180 FR. – BB – TS – TEFC

MAT'L.
FINISH
CAD FILE ss63661

DRAWN	RM 01-08-1993
CHK	ML 01-13-1993
APPD	GK 01-13-1993
SCALE	1=4
REF	
FMF	
PREV	

RFP
DIST LB

SIZE	DRAWING NO.	PAGE	OF	REV.
A	SS63661			13

THIS DRAWING IN DESIGN AND DETAIL IS OUR PROPERTY AND MUST NOT BE USED EXCEPT IN CONNECTION WITH OUR WORK ALL RIGHTS OF DESIGN AND INVENTION ARE RESERVED
THIS IS AN ELECTRONICALLY GENERATED DOCUMENT – DO NOT SCALE THIS PRINT

1/31/2011 2:11:01 PM

Uncontrolled Copy

THREE PHASE
DUAL VOLTAGE MOTOR

HIGH VOLTAGE

(U1) T1 — L1
(V1) T2 — L2
(W1) T3 — L3
(U2) T4
(U3) T7
(V2) T5
(V3) T8
(W2) T6
(W3) T9

LOW VOLTAGE

(U1) T1
(U3) T7 — L1
(V1) T2
(V3) T8 — L2
(W1) T3
(W3) T9 — L3
(U2) T4
(V2) T5
(W2) T6

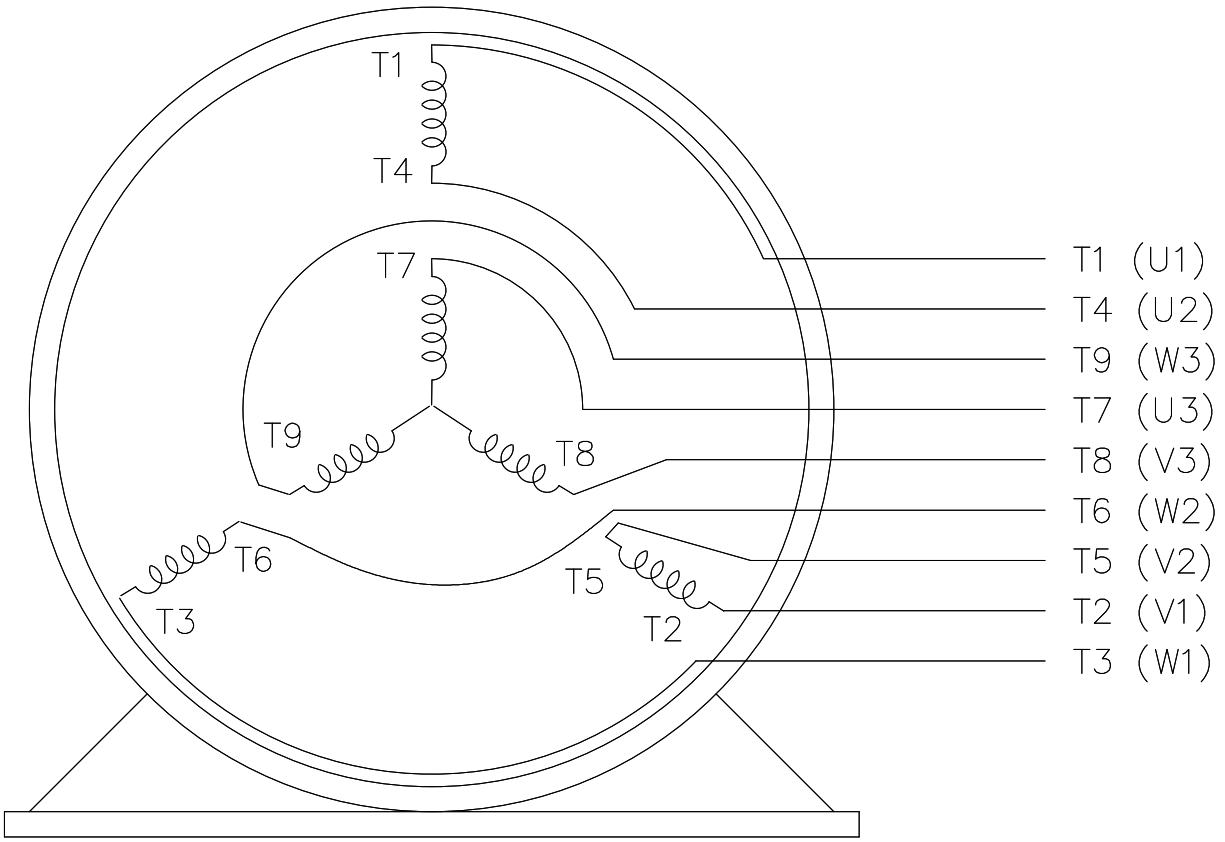

VIEW OF TERMINAL END

REF.
WINDING DIAGRAM

T8Y, T2Y, T2BL, T4BX, T2EC, T2G
T6BZ, T2B, T6BL, T4AV, T6B, T4B

OPTIONAL CORD CONNECTION

L1 — WHITE
L2 — RED
L3 — BLACK

DRAWING REVISION	REVISION BY	REV DATE/ © DATE
J	SB	08/01/2025
REQUEST NUMBER	APPROVED BY	DATE
CR-0023654	SBD	08/01/2025

REQUEST NUMBER DESCRIPTION
DRAWING TITLE BLOCK UPDATED

COPYRIGHT (PER REVISION DATE) MARATHON ELECTRIC, LLC. ALL RIGHTS RESERVED. PROPRIETARY AND CONFIDENTIAL INFORMATION - THIS DOCUMENT IS THE PROPERTY OF MARATHON ELECTRIC, LLC. ("OWNER") AND CONTAINS OWNER'S PROPRIETARY INFORMATION. ANY PERSON, CORPORATION OR OTHER FIRM RECEIVING IT IS DEEMED, BY RECEIVING IT, TO AGREE THAT IT, AND/OR ANY PART OF IT, SHALL NOT BE DISCLOSED TO ANY PERSON, CORPORATION OR OTHER ENTITY, DUPLICATED, AND/OR USED, EXCEPT AS EXPRESSLY APPROVED IN WRITING IN ADVANCE BY OWNER. THIS DOCUMENT SHALL BE RETURNED TO OWNER UPON REQUEST. IT MAY BE SUBJECT TO CERTAIN RESTRICTIONS UNDER APPLICABLE EXPORT CONTROL LAWS AND REGULATIONS.

PRIMARY DIMENSIONS ARE INCH
mm DIMENSIONS IN [BRACKETS]
ARE FOR REFERENCE ONLY

DRAWN BY	RM
DATE	11/20/1990
APPROVED BY	SAS
DATE	04/24/2003
REFERENCE	
THIRD ANGLE PROJECTION	

marathon™

DESCRIPTION
CONN DIAGRAM-EXTERNAL
3Ø - DUAL VOLTAGE MOTOR

MATERIAL	PROCESS/FINISH

SIZE	DRAWING NUMBER	SHEET
A	4 of 6 EE7308	1 OF 1

Data Sheet

Date: 6/29/2017
Customer:
Attention:
Submitted by: FAREEDA DUDEKULA

marathon electric

184TTFS6844

Submittal

Data @ 460 V

Motor Load Data

Load	0%	25%	50%	75%	100%	115%	125%	LR	
Current (Amps)	2.80	3.0	3.8	5.0	6.2	7.2	7.8	46.0	
Torque (ft-lb)	0.00	3.7	7.4	11.5	15.0	17.5	19.0	34.5	
RPM	1800	1790	1780	1765	1755	1,745	1740	0	
Efficiency (%)		85.5	90.2	90.2	90.2	89.5	88.5		
P.F. (%)	6.5	47.0	70.0	78.5	83.5	84.5	86.0	48.0	

Motor Speed Data

	LR	Pull-Up	BD	Rated	Idle
Speed (RPM)	0	900	1600	1755	1800
Current (Amps)	46.0	41.0	25.0	6.2	2.80
Torque (ft-lb)	34.5	31.0	45.0	15.0	0.00

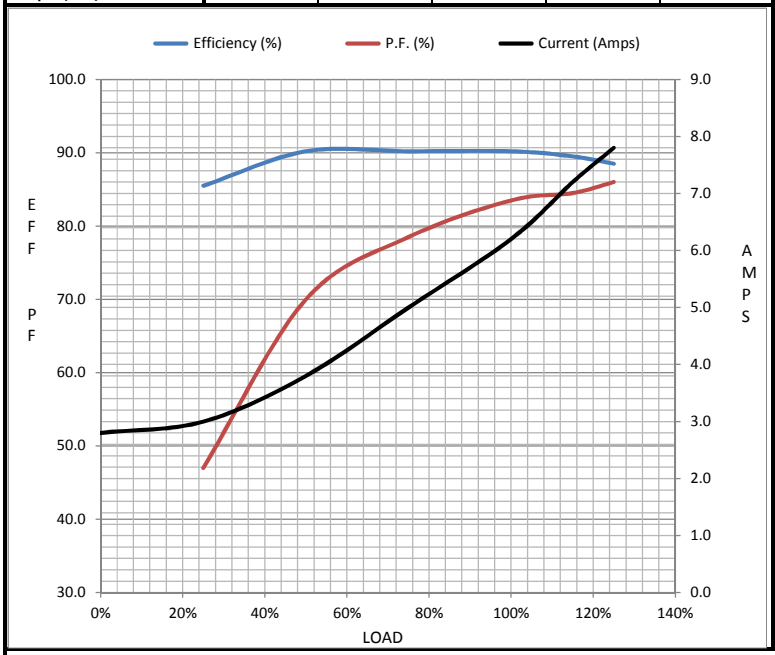

Information Block

HP	5.0
Sync. RPM	1800
Frame	184
Enclosure	TEFC
Construction	TFN
Voltage	230/460 V
Frequency	60 Hz
Design	B
LR Code letter	J
Service Factor	1.15
Temp Rise @ FL	50 ° C
Duty	CONT
Ambient	40 ° C
Elevation	1,000 feet
Rotor/Shaft wk²	0.50 Lb-Ft²
Ref Wdg	K1844215 NONE
Sound Pressure @ 1M	62 dBA
VFD Rating	CONSTANT 20:1
Outline Dwg	A-SS63661-675
Conn. Diag	A-EE7308
Additional Specifications:	
0	
0	

EQUIV CKT (OHMS / PHASE)

R1	R2	X1	X2	Xm
1.5080	1.1280	3.6910	5.6930	104.3280

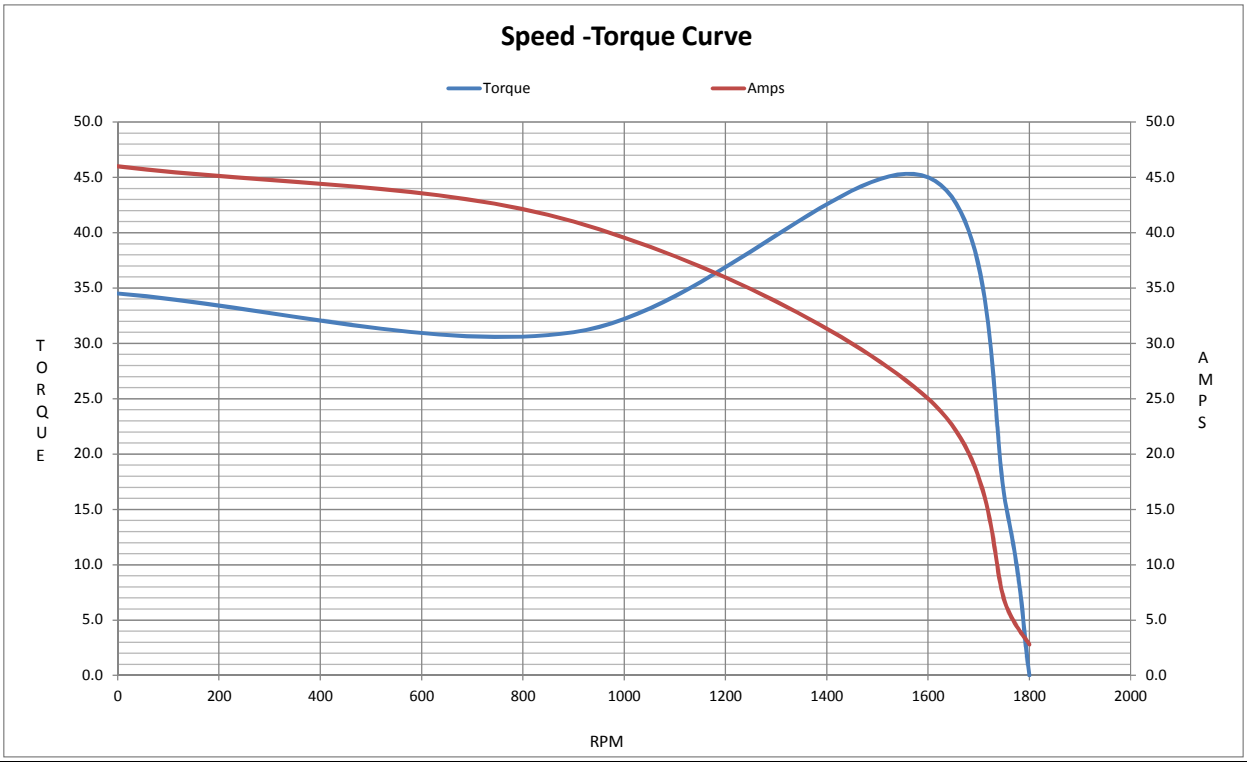

Uncontrolled Copy

CERTIFICATION DATA SHEET

Model#:	184TTFS6844 BP	**WINDING#:**	K1844215 NONE 1
CONN. DIAGRAM:	A-EE7308	**ASSEMBLY:**	F1/F2 CAPABLE
OUTLINE:	A-SS63661-675		

TYPICAL MOTOR PERFORMANCE DATA

HP	KW	SYNC. RPM	F.L. RPM	FRAME	ENCLOSURE	KVA CODE	DESIGN
5	3.7	1800	1755	184T	TEFC	J	B

PH	Hz	VOLTS	FL AMPS	START TYPE	DUTY	INSL	S.F	AMB°C	ELEVATION
3	60	230/460	12.4/6.2	LINE OR INVERTER	CONTINUOUS	F3	1.15	40	3300

FULL LOAD EFF: 90.2	3/4 LOAD EFF: 90.2	1/2 LOAD EFF: 90.2	GTD. EFF	ELEC. TYPE	NO LOAD AMPS
FULL LOAD PF: 83.5	3/4 LOAD PF: 78.5	1/2 LOAD PF: 70	89.5	SQ CAGE INV RATED	5.6 / 2.8

F.L. TORQUE	LOCKED ROTOR AMPS	L.R. TORQUE	B.D. TORQUE	F.L. RISE°C
15 LB-FT	92 / 46	34.5 LB-FT 230	45 LB-FT 300	50

SOUND PRESSURE @ 3 FT.	SOUND POWER	ROTOR WK^2	MAX. WK^2	SAFE STALL TIME	STARTS /HOUR	APPROX. MOTOR WGT
62 dBA	72 dBA	0.5 LB-FT^2	50 LB-FT^2	25 SEC.	2	130 LBS.

*** SUPPLEMENTAL INFORMATION ***

DE BRACKET TYPE	ODE BRACKET TYPE	MOUNT TYPE	ORIENTATION	SEVERE DUTY	HAZARDOUS LOCATION	DRIP COVER	SCREENS	PAINT
STANDARD	STANDARD	RIGID	HORIZONTAL	PREMIUM SEVERE DUTY	DIVISION 2 T2B	FALSE	NONE	BLUE (EPOXY)

BEARINGS		GREASE	SHAFT TYPE	SPECIAL DE	SPECIAL ODE	SHAFT MATERIAL	FRAME MATERIAL
DE	OPE						
BALL 6206	BALL 6205	POLYREX EM	T	NONE	NONE	1144 STRESSPROOF (C-223)	CAST IRON

THERMO-PROTECTORS				THERMISTORS	CONTROL	SPACE /n HEATERS
THERMOSTATS	PROTECTORS	WDG RTDs	BRG RTDs			
NONE	NOT	NONE	NONE	NONE	FALSE	NONE VOLTS

If Inverter equals NONE, contact factory for further information

INVERTER TORQUE: CONSTANT 20:1
INV. HP SPEED RANGE: 1.5 X BASE SPEED

ENCODER: NONE
NONE NONE
NONE NONE PPR

BRAKE: NONE NONE
NONE P/N NONE
NONE NONE
- FT-LB NONE V NONE Hz

*
NOTES
*

DATE: 06/21/2017 11:37:15 AM
FORM 3531 REV.3 02/07/99
** Subject to change without notice.