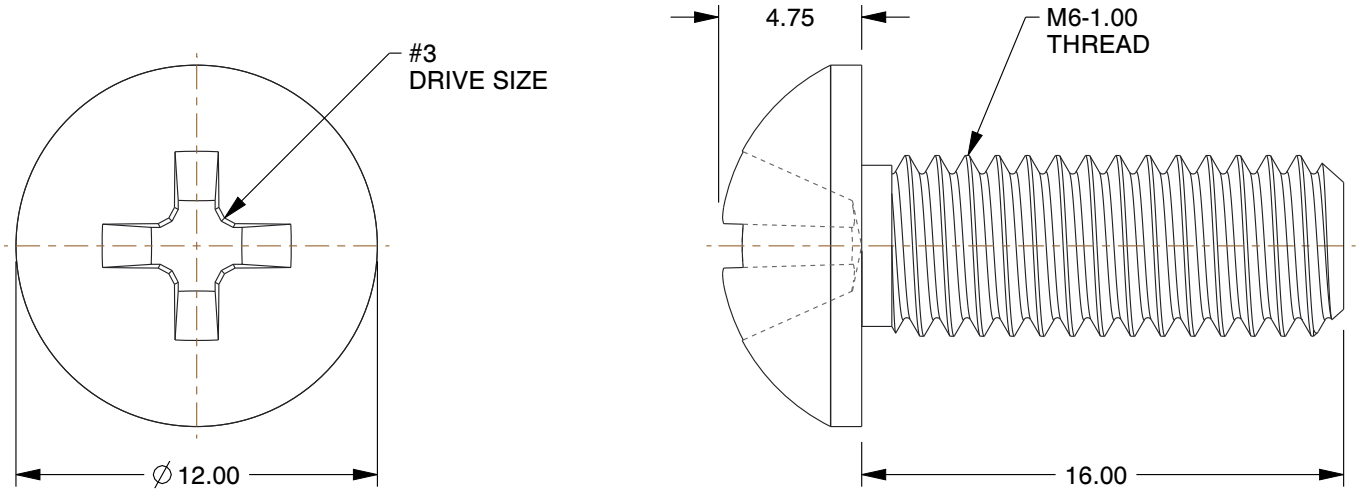

COMPONENT	Machine Screw

zoro.com

Zoro Tools, Inc.
500 W Madison St, Chicago, IL 60661, USA
Ph: (855) 289-9676

This file and any associated information and specifications are provided for reference and evaluation purposes only, and is subject to change without notice. Zoro makes no representations, warranties or guarantees as to the appropriateness, accuracy, completeness, or suitability for any purpose, of the file, information or specifications. You are solely responsible for the use of the file, information or specifications.

This drawing is the property of ZORO. It contains confidential, proprietary information that is ZORO property. Do not disclose to or duplicate for others except as authorized by ZORO.

SCALE	0.17

G1934904

M6-1.00 x 16 mm Phillips Fillister
Machine Screw, Zinc Plated Steel, 100 PK

UNIT
MM
SHEET
1 of 1