Specification Sheet for Hippo Hopper Model HH64MD

HIPPO HOPPER®
SELF-DUMPING HOPPERS

www.hippohopper.com
Toll Free: (855) 456-4570
sales@hippohopper.com

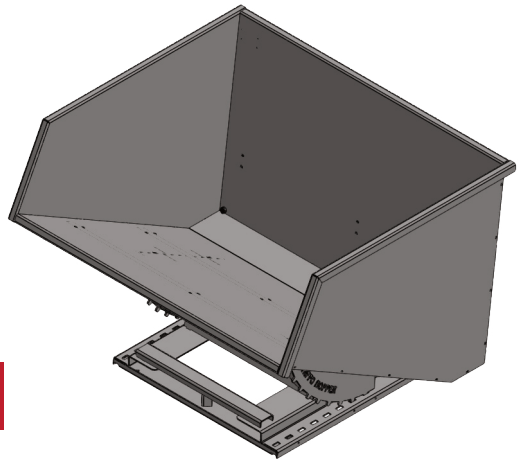

4 CU YD MEDIUM DUTY HOPPER

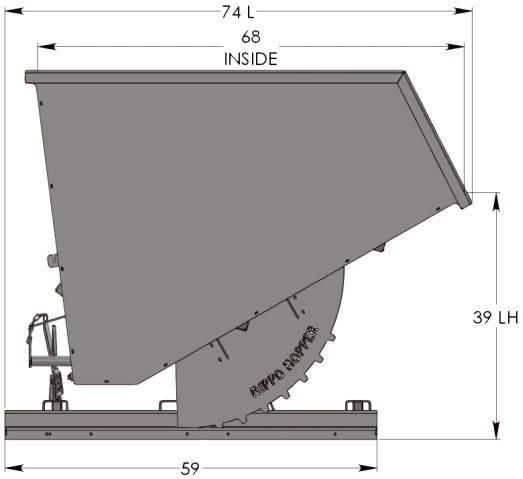

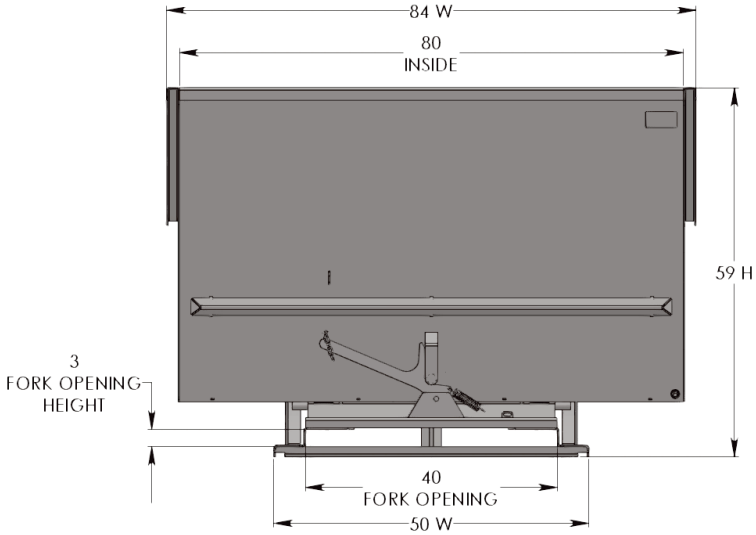

MODEL	SIZE	Weight	L	W	H	LH	CAPACITY
HH64MD	4 CU YD	990 lbs.	74”	84”	59”	39”	4000 lbs.

- Water tight 10 Gauge Carbon Steel Box with 3/4” drain plug
- 3/8” Laser cut single piece gear style rockers
- 3/16” Formed Steel Base: 50”W x 59”L
- Fork pocket opening: 40”W x 2.75”H
- Formed top rails: 2” x 2”
- Big & Easy pull-down handle release with safety chain

This Medium Duty Hippo Hopper has a 10 Gauge Carbon Steel watertight box with a 2” x 2” formed top rail and 3/16” formed steel base. All Hippo Hoppers have a two piece rocker that is designed to allow the hopper to rock back into position after dumping (the fewer parts, the fewer problems). Each hopper is also equipped with a pull-down handle, making the hopper easier and safer to dump. Standard finish - gray industrial paint - optional colors, powder coating and hot galvanizing finish also available.

Customer Service: (832) 456-4516 or (832) 456-4522 Email: sales@hippohopper.com

The **Hippo Hopper** self-dumping hopper is the fastest, safest, easiest, and most economical way to load, transport and dump scrap and bulk material.

Manufactured by:

FabCorp, inc.

Hippo Hopper Plant • 27807 Red Fox Rd. • Tomball, TX 77377
FabCorp, Inc. • 6951 West Little York Rd. • Houston, TX 77040

MADE IN AMERICA