RIB Functional Devices, Inc.™ (800) 888-5538 sales@functionaldevices.com www.functionaldevices.com

LOW COIL INPUT TRACK MOUNT RELAY

RIBME2402B

4.00″ Track Mount Relay 20 Amp SPDT,
24 Vac/dc/208-277 Vac Power Input +
5-25 Vac/dc Control Input

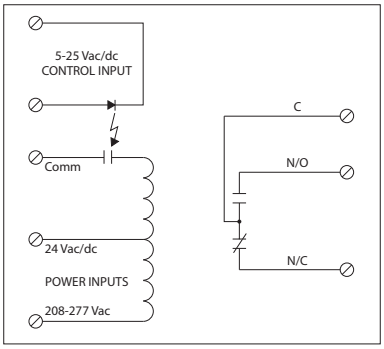

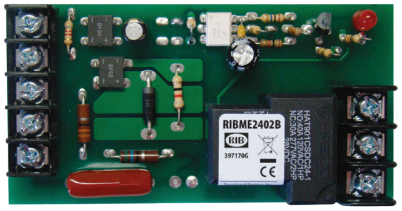

SPECIFICATIONS

Power Input: 24 Vac/dc/208-277 Vac, 50-60 Hz
Control Input: 5-25 Vac/dc, 50-60 Hz
 # Relays & Contact Type: One (1) SPDT Continuous Duty Coil
Expected Relay Life: 10 million cycles minimum mechanical
Operating Temperature: -30 to 140° F
Humidity Range: 5 to 95% (noncondensing)
Operate Time: 18ms
Relay Status: LED On = Activated
Dimensions: 2.050″ x 4.000″ x 1.750″
Track Mount: 4.000″, MT4 Mounting Track Sold Separately
Approvals: UL Listed, UL916, UL864, C-UL
California State Fire Marshal, CE, RoHS
Gold Flash: No
Override Switch: No

Contact Ratings:
20 Amp Resistive @ 277 Vac
1110 VA Pilot Duty @ 277 Vac
770 VA Pilot Duty @ 120 Vac
20 Amp Ballast @ 277 Vac
16 Amp Electronic Ballast @ 277 Vac (N/O)
10 Amp Tungsten @ 120 Vac (N/O)
240 Watt Tungsten @ 120 Vac (N/C)
2 HP @ 277 Vac
1 HP @ 120 Vac

Power Input Ratings:
50 mA @ 18 Vac
83 mA @ 24 Vac
69 mA @ 208-277 Vac
33 mA @ 22 Vdc
35 mA @ 24 Vdc
47 mA @ 30 Vdc

Control Input Ratings:
.4 mA @ 5 Vdc
.9 mA @ 10 Vdc
1 mA @ 12 Vdc
2 mA @ 24 Vdc
3 mA @ 24 Vac
(Non Polarized)