Dimensional Drawing

6XJ29BB	REV. 0

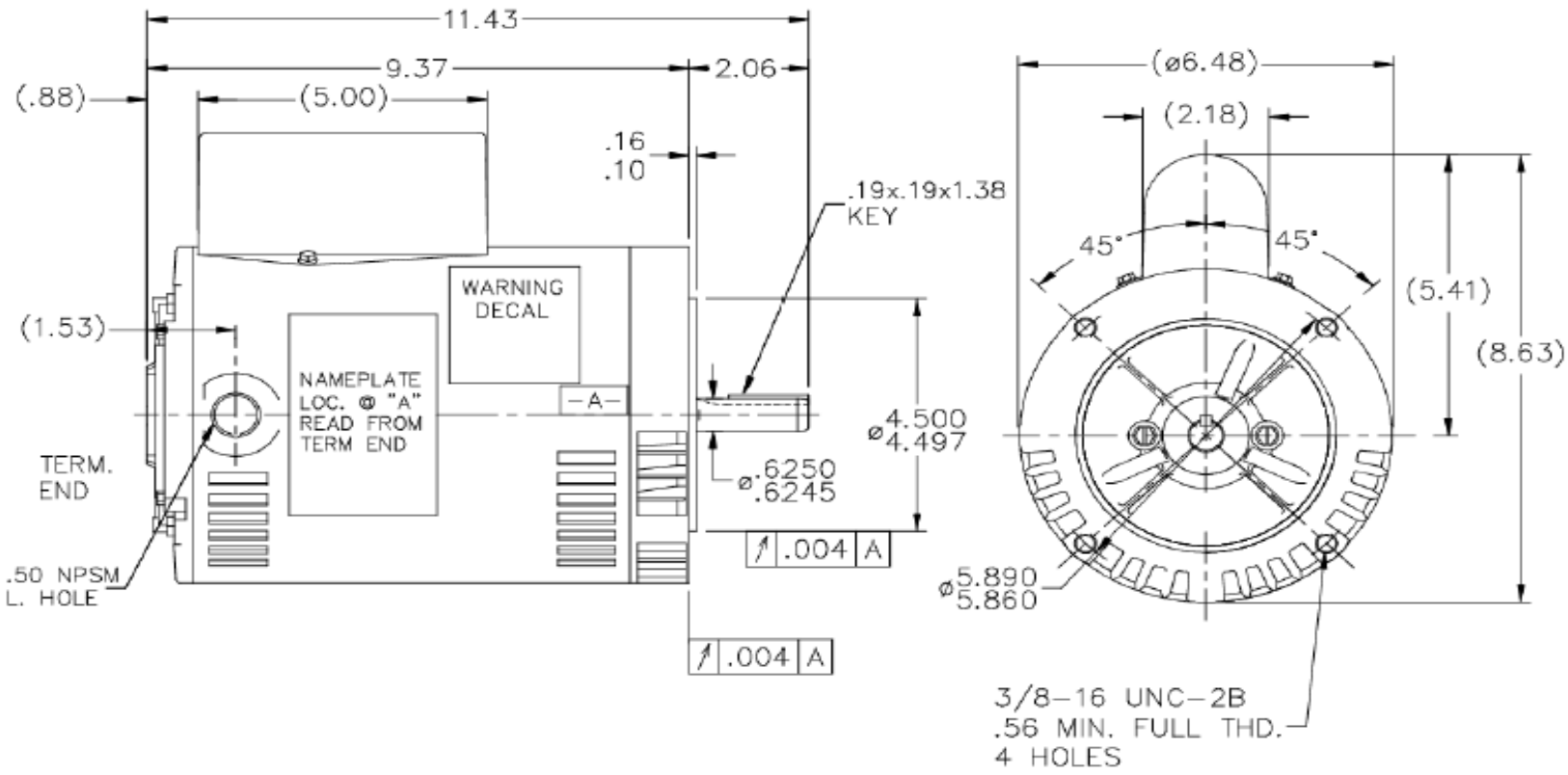

DRAWING NO.	PAGE OF	REV.
6XJ29BB		0

©2014 W.W. Grainger, Inc. This design may not be reproduced, modified or redistributed without written permission from W.W. Grainger, Inc.