Dimensional Drawing

6XJ21BB	REV. 0

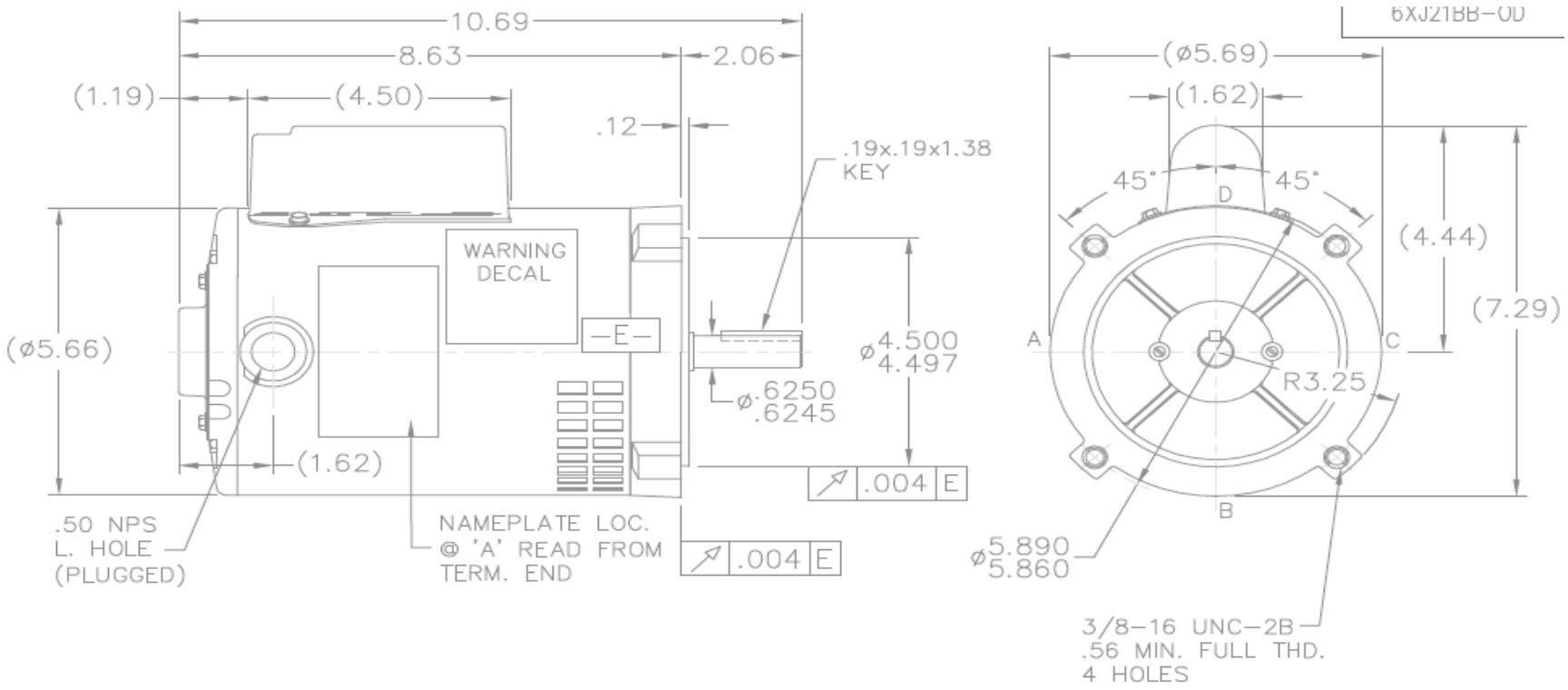

DRAWING NO.	PAGE OF	REV.
6XJ21BB		0

Dayton Electric Mfg. Co. Lake Forest, IL 60045 USA

©2014 W.W. Grainger, Inc. This design may not be reproduced, modified or redistributed without written permission from W.W. Grainger, Inc.