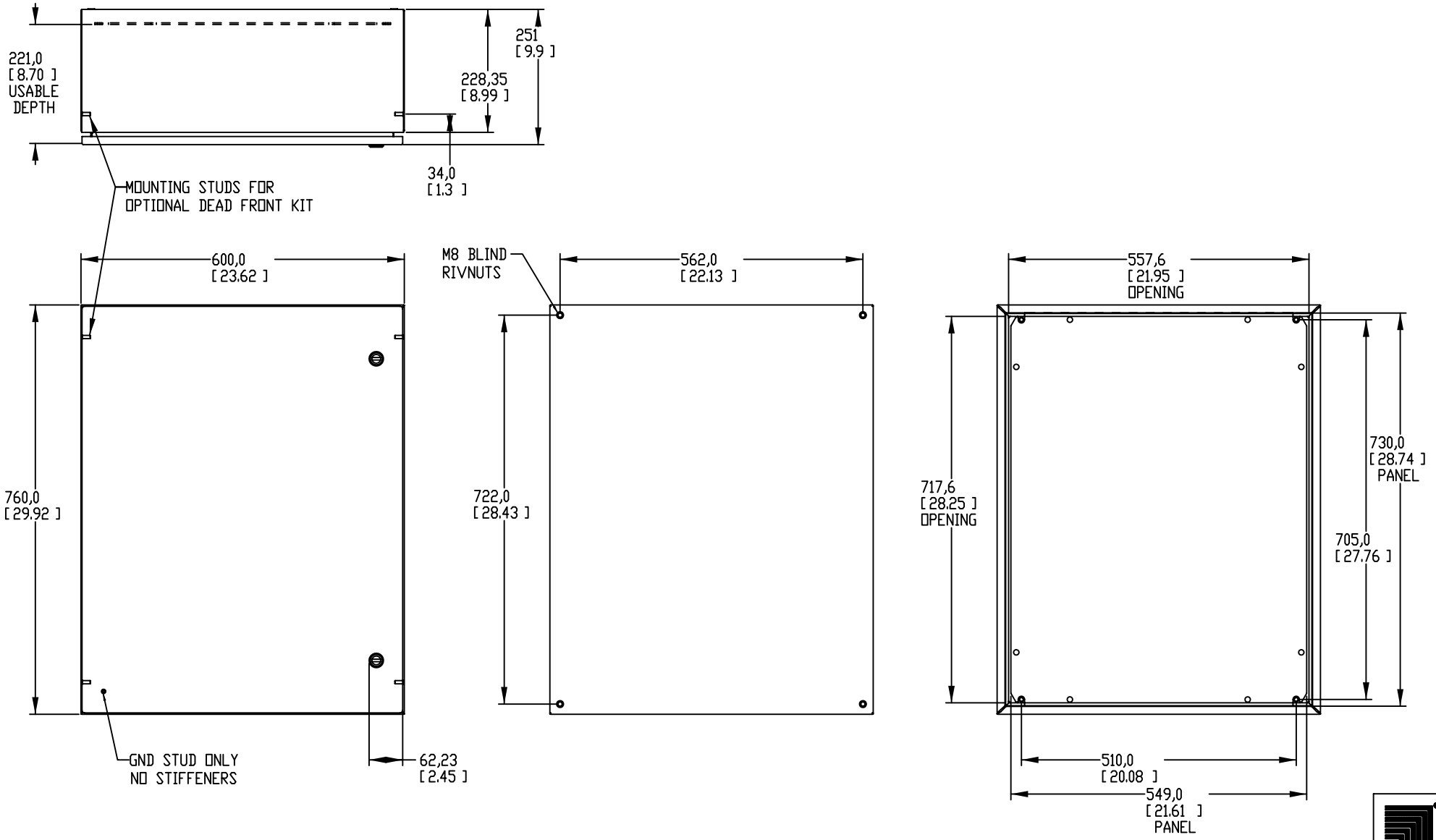
221,0
[8.70]
USABLE
DEPTH
251
[9.9]
228,35
[8.99]
34,0
[1.3]
MOUNTING STUDS FOR
OPTIONAL DEAD FRONT KIT
600,0
[23.62]
760,0
[29.92]
GND STUD ONLY
NO STIFFENERS
62,23
[2.45]
M8 BLIND
RIVNUTS
562,0
[22.13]
722,0
[28.43]
557,6
[21.95]
OPENING
717,6
[28.25]
OPENING
730,0
[28.74]
PANEL
705,0
[27.76]
510,0
[20.08]
549,0
[21.61]
PANEL
WM302410N6_WEB