Dimensional Drawing

1TMW1	REV. -

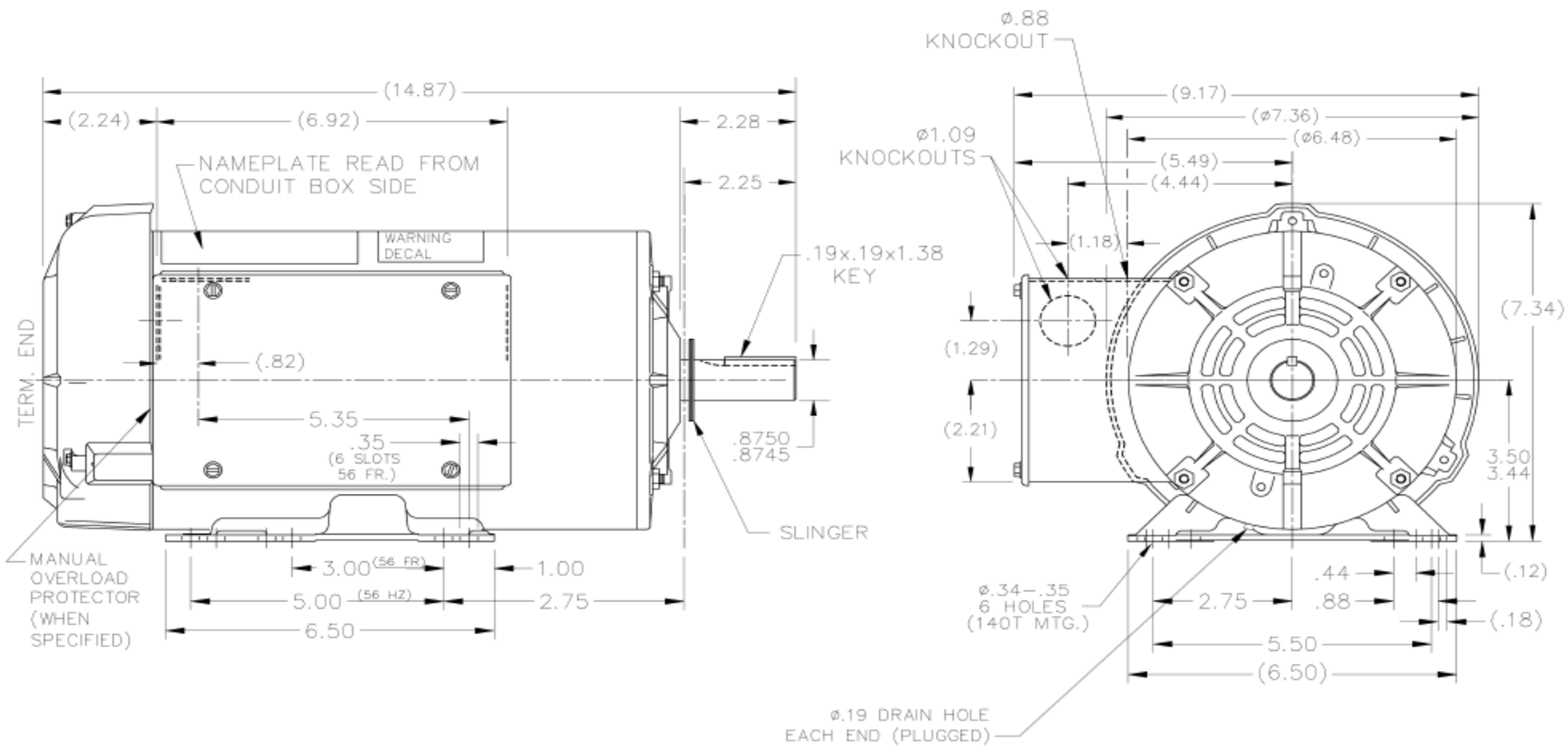

DRAWING NO.	PAGE OF	REV.
	1TMW1	-

Dayton Electric Mfg. Co. Lake Forest, IL 60045 USA

©2013 W.W. Grainger, Inc. This design may not be reproduced, modified or redistributed without written permission from W.W. Grainger, Inc.