PLEASE READ AND SAVE THESE INSTRUCTIONS. READ CAREFULLY BEFORE ATTEMPTING TO ASSEMBLE, INSTALL, OPERATE OR MAINTAIN THE PRODUCTS DESCRIBED. PROTECT YOURSELF AND OTHERS BY OBSERVING ALL SAFETY INFORMATION. FAILURE TO COMPLY WITH INSTRUCTIONS COULD RESULT IN PERSONAL INJURY AND/OR PROPERTY DAMAGE! RETAIN INSTRUCTIONS FOR FUTURE REFERENCE.

Dayton® Wet/Dry Vacuums

COMMERCIAL / INDUSTRIAL USE

Description

The Dayton wet/dry vacuum cleaners are for vacuuming wet and dry non-combustible materials. Equipped with powerful, permanently lubricated, single-stage by-pass motors. Features: motor housing, blower port, large tank drains, long power cords, convenient on-board tool storage, durable stainless steel tank (1VHG1) and rugged dent resistant, rust proof plastic tanks (1VHF9). Equipped with easy roll casters and large wheel dolly systems. Includes versatile deluxe accessory make-up (See Parts List). Efficient filtration make-up (See Parts List). cULus.

(1VHF9)

(1VHG1)

Specifications

Model	Tank Style	Tank Capacity	Electrical Rating	Static Pressure	Air Movement	Filters
1VHF9	Plastic	20 Gal. (75.7 liters)	120V, 60 Hz AC 12 Amps	60" (152.4cm)	195 (5,5m³/min)	Cartridge and Collection Bag
1VHG1	Stainless Steel	16 (60.6)	120V, 60 Hz AC 12 Amps	60 (152.4)	195 (5,5)	Cartridge and Collection Bag

IMPORTANT SAFETY INSTRUCTIONS

ALWAYS WEAR EYE PROTECTION

⚠ DANGER

Never operate this unit when flammable materials or vapors are present because electrical devices produce arcs or sparks that can cause a fire or explosion. NEVER OPERATE UNATTENDED!

When using an electrical appliance, basic precautions should always be followed including the following: **READ ALL INSTRUCTIONS BEFORE USING THIS APPLIANCE.**

⚠ WARNING

TO REDUCE THE RISK OF FIRE, ELECTRIC SHOCK OR INJURY:

1. Do not leave appliance when plugged in. Unplug from outlet when not in use and before servicing. Connect to a properly grounded outlet only. See Grounding Instructions.
2. Do not expose to rain-store indoors.

3. Do not allow to be used as a toy. Close attention is necessary when used by or near children.
4. Use only as described in this manual. Use only Manufacturer's recommended attachments.
5. Do not use with damaged cord or plug. If appliance is not working as it should, has been dropped, damaged, left outdoors or dropped into water, return it to a service center.
6. Do not: pull or carry by cord, use cord as a handle, close a door on cord or pull cord around sharp edges or corners. Do not run appliance over cord. Keep cord away from heated surfaces.
7. Do not unplug by pulling on cord. To unplug, grasp the plug, not the cord.
8. Do not handle plug or appliance with wet hands.
9. Do not put any object into openings. Do not use with any openings blocked; keep free of dust, lint, hair and anything that may reduce air flow.
10. Keep hair, loose clothing, fingers and all parts of body away from openings and moving parts.
11. Do not pick up anything that is burning or smoking, such as cigarettes, matches or hot ashes.
12. Do not use without dust bag and/or filters in place.
13. Turn off all controls before unplugging.
14. Use extra care when cleaning on stairs.
15. Do not use to pick up flammable or combustible liquids such as gasoline or use in areas where they may be present.
16. Do not use your cleaner as a sprayer of flammable liquids such as oil base paints, lacquers, household cleaners, etc.
17. Do not vacuum toxic, carcinogenic, combustible or other hazardous materials such as asbestos, arsenic, barium, beryllium, lead, pesticides, or other health endangering materials. Specially designed units are available for these purposes.
18. Do not pick up soot, cement, plaster or drywall dust without cartridge filter and collection filter bag in place. These are very fine particles that may pass through the foam and affect the performance of the motor or be exhausted back into the air. Additional collection filter bags are available.
19. Do not leave the cord lying on the floor once you have finished the cleaning job. It can

ENGLISH

ESPAÑOL

FRANÇAIS

Printed in U.S.A.
07985
Version 1
01/2013

87548-59

Dayton®

Dayton® Wet/Dry Vacuums

IMPORTANT SAFETY INSTRUCTIONS (CONTINUED)

become a tripping hazard.

20. Use special care when emptying heavily loaded tanks.
21. To avoid spontaneous combustion, empty tank after each use.
22. The operation of a utility vac can result in foreign objects being blown into eyes, which can result in eye damage. Always wear safety goggles when operating vacuum.
23. **STAY ALERT.** Watch what you are doing and use common sense. Do not use vacuum cleaner when you are tired, distracted or under the influence of drugs, alcohol, or medication causing diminished control.
24. **WARNING!** Do **NOT** use this vacuum cleaner to vacuum lead paint debris because this may disperse fine lead particles into the air. This vacuum cleaner is not intended for use under EPA Regulation 40 CFR Part 745 for lead paint material cleanup.

E N G L I S H

SAVE THESE INSTRUCTIONS

⚠ WARNING ***DO NOT LEAVE VACUUM UNATTENDED WHEN IT IS PLUGGED IN AND/OR OPERATING. UNPLUG UNIT WHEN NOT IN USE.***

GROUNDING INSTRUCTIONS

This appliance must be grounded. If it should malfunction or breakdown, grounding provides a path of least resistance for electric current to reduce the risk of electric shock. This appliance is equipped with a cord having an equipment-grounding conductor and grounding plug. The plug must be inserted into an appropriate outlet that is properly installed and grounded in accordance with all local codes and ordinances.

⚠ WARNING

IMPROPER CONNECTION OF THE EQUIPMENT-GROUNDING CONDUCTOR CAN RESULT IN A RISK OF ELECTRIC SHOCK. CHECK WITH A QUALIFIED ELECTRICIAN OR SERVICE PERSON IF YOU ARE IN DOUBT AS TO WHETHER THE OUTLET IS PROPERLY GROUNDED. DO NOT MODIFY THE PLUG PROVIDED WITH THE APPLIANCE—IF IT WILL NOT FIT THE OUTLET, HAVE A PROPER OUTLET INSTALLED BY A QUALIFIED ELECTRICIAN.

This appliance is for use on a nominal 120-volt circuit, and has a grounded plug that looks like the plug illustrated in **sketch A**. A temporary adapter that looks like the adapter illustrated in **sketches B and C** may be used to connect this plug to a 2-pole receptacle as shown in **sketch B** if a properly grounded outlet is not available. The temporary adapter should be used only until a properly grounded outlet **(sketch A)** can be installed by a qualified electrician. The green colored rigid ear, lug or the like extending from the adapter must be connected to a permanent ground such as a properly grounded outlet box cover. Whenever the adapter is used, it must be held in place by a metal screw.

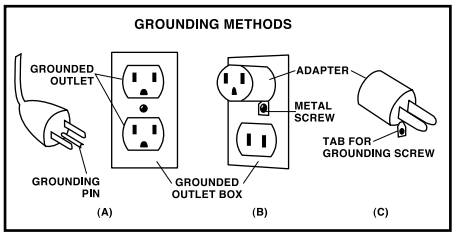

IN CANADA, THE USE OF A TEMPORARY ADAPTER IS NOT PERMITTED BY THE CANADIAN ELECTRICAL CODE. Make sure that the appliance is connected to an outlet having the same configuration as the plug. No adapter should be used with this appliance.

⚠ WARNING

IF THE CORD IS DAMAGED, IT MUST BE REPLACED BY A SPECIAL CORD OR ASSEMBLY AVAILABLE FROM THE MANUFACTURER OR HIS AUTHORIZED SERVICE AGENT.

EXTENSION CORDS

When using the appliance at a distance where an extension cord becomes necessary, a 3-conductor grounding cord of adequate size must be used for safety and to prevent loss of power and overheating. Use the table below to determine A.W.G. wire size required. To determine ampere rating of your vacuum, refer to nameplate located on motor housing/cover. Before using appliance, inspect power cord for loose or exposed wires and damaged insulation. Make any needed repairs or replacements before using your appliance. Use only three-wire outdoor extension cords which have three-prong grounding-type plugs and three-pole receptacles which accept the extension cord's plug. When vacuuming liquids, be sure the extension cord connection does not come in contact with the liquid.

NOTE: STATIC SHOCKS ARE COMMON IN DRY AREAS OR WHEN THE RELATIVE HUMIDITY OF THE AIR IS LOW. THIS IS ONLY TEMPORARY AND DOES NOT AFFECT THE USE OF THE APPLIANCE. TO REDUCE THE FREQUENCY OF STATIC SHOCKS IN YOUR HOME, THE BEST REMEDY IS TO ADD MOISTURE TO THE AIR WITH A CONSOLE OR INSTALLED HUMIDIFIER.

Volts	Total length of cord in feet			
120V	25	50	100	150
Ampere Rating More Than – Not More Than	AWG			
0 - 6	18	16	16	14
6 - 10	18	16	14	12
10 - 12	16	16	14	12
12 - 16	14	12	Not recommended	

Models 1VHF9 and 1VHG1

Unpacking

UNPACKING AND SET-UP

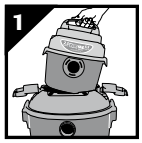

1. Remove vacuum cleaner and all accessories from the carton.
2. Slide securement arms in an outward motion and pull upward on top handle to remove the portable vacuum **(Figure 1).**
3. Pull lid latches on the large tank cover in an outward motion, remove tank cover and any accessories which may have been shipped in the tank.
4. Assemble dolly or caster system following instructions.
5. Replace tank cover on the large tank and apply pressure with thumbs to each latch until it snaps tightly in place. Make sure both lid latches are clamped securely.
6. Remove tank cover on portable vacuum by pushing in the side lugs with thumbs and lifting up on the tabs of the tank cover. Remove any accessories, which may have been shipped in the tank.
7. Before replacing cover, please refer to Dry Pick up or Wet Pick up operation to ensure proper filter installation.
8. Replace tank cover on the small tank by aligning tabs with the lugs. Press down firmly on the upper housing until tank cover snaps into place.

PORTABLE VACUUM

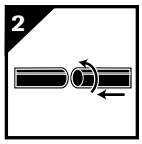

a. To use portable vacuum, insert machine hose end of the non-locking hose into inlet of the small tank. Twist slightly to tighten the connection **(Figure 2).**
b. Attach one of the cleaning accessories (depending on your cleaning requirements) to the accessory end of hose. Twist slightly to tighten the connection **(Figure 2).**
c. Plug the cord into the wall outlet. Your portable vacuum is ready for use.

(I) = ON (O) = OFF

LARGE CAPACITY VACUUM

a. To use large capacity vacuum, place portable vacuum in cradle of large tank cover. Slide side securement arms in an inward motion and apply pressure to each securement arm until it snaps tightly in place. Make sure both securement arms are clamped securely.
b. Insert machine hose end with locking-nut into inlet of the large tank and tighten. Do not overtighten.
c. Attach the extension wands to the accessory end of hose. Twist slightly to tighten the connection **(Figure 2).**
d. Attach one of the cleaning accessories (depending on your cleaning requirements) on the extension wands. Twist slightly to tighten the connection **(Figure 2).**
e. Plug the cord into the wall outlet. Your large capacity vacuum is ready for use.

(I) = ON (O) = OFF

Assembly

CASTER SYSTEM ASSEMBLY

(Model 1VHF9) You will find four caster feet, four casters and four screws **(Figure 3)** with your wet/dry vacuum.

Assemble as follows:

1. With cord disconnected from receptacle and tank cover removed, turn tank upside down so that bottom is facing up.
2. With front of tank facing you, take caster feet marked with the letter A **(Figure 4)** and place in slots on left front and right rear of tank also marked with the letter A **(Figure 5).** Secure with screws provided **(Figure 6).**
3. Take caster feet marked with the letter B **(Figure 7)** and place in slots on right front and left rear of tank also marked with the letter B **(Figure 8).** Secure with screws provided **(Figure 9).**
4. If flat washers are included in hardware package place flat washer over stem of caster before installing casters into feet. **NOTE:** Flat washers are not required with all units.
5. Insert casters into feet by placing stem of caster into holes provided. Apply pressure and twisting motion until casters snap into place **(Figure 10).** Return tank to upright position.

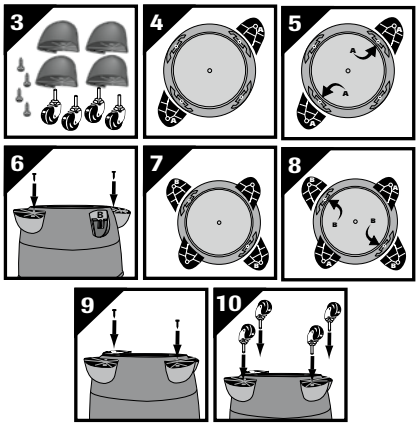

TOOL HOLDER ASSEMBLY

(Model 1VHG1)

1. With rear of unit facing you, take tool holder and position it with tabs facing rear of unit **(Figure 11).**
2. Place "J" shaped tabs into the slots on cord wraps **(Figure 12).**
3. Press down until tabs snap into place.
4. Press down on center of tool holder until tab latches on bottom lid **(Figure 13).**

(Model 1VHF9)

1. With rear of unit facing you, take tool holder and slide over notches on rear of tank **(Figure 14)**

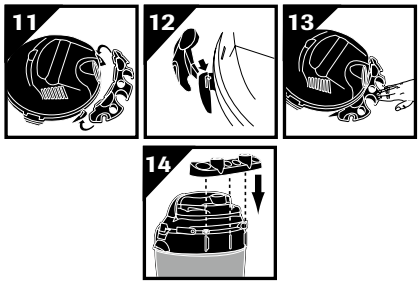

Operation

⚠ DANGER

This equipment incorporates parts such as switches, motors or the like that tend to produce arcs or sparks that can cause an explosion. Do not pick up flammable, combustible, or hot materials. Do not use around explosive liquids or vapors, as electrical devices produce arcs or sparks which can cause a fire or explosion - do not use at filling stations or anywhere gasoline is stored or dispensed.

⚠ WARNING

ALWAYS DISCONNECT THE PLUG FROM THE WALL OUTLET BEFORE REMOVING THE TANK COVER.

⚠ CAUTION

KEEP FILTERS CLEAN

EFFICIENCY OF THE VACUUM IS LARGELY DEPENDENT ON THE FILTER. A CLOGGED FILTER CAN CAUSE OVERHEATING AND POSSIBLY DAMAGE THE CLEANER. CHECK THE FILTER PERIODICALLY AND REPLACE AS REQUIRED.

NOTE: Never machine wash or dry filters

DRY PICK UP OPERATION

INSTALLING THE CARTRIDGE

(Not standard with all models)

NOTE: If foam sleeve is in position over large lid cage, it does not need to be removed before installing cartridge. Foam must be positioned on the INSIDE of groove around lid cage for cartridge to fit properly. If the foam sleeve is in

ENGLISH

Dayton®

Dayton® Wet/Dry Vacuums

ENGLISH

Operation (continued)

position over the portable vacuum lid cage it must be removed before installing cartridge filter. The cartridge filter can be used for wet or dry pick up; installation is the same for both. When picking up large quantities of water containing debris we recommend using the foam sleeve **(not standard with all models)** in position over lid cage. Use the cartridge filter in position over the lid cage for most general dry material pick up. When using the large capacity vacuum, make sure inlet deflector is fully inserted into deflector guide on inside of tank. If it is not, install inlet deflector by sliding it downward into slot on deflector guide **(Figure 15) NOTE:** Hose must be removed before inlet deflector can be inserted into or removed from deflector guide. Opening on deflector guide can face either side of tank. Inlet deflector should always be in place for any type of cleaning. With tank cover in an upside down position, slide the cartridge filter down over the lid cage, pushing until the filter seals against cover **(Figure 16).** Use the large cartridge filter on the large lid cage. Use the small cartridge filter on the portable vacuum's lid cage. Place filter retainer onto the top of the cartridge filter **(Figure 17).** Hold the tank cover with one hand, turn the handle on the filter retainer clockwise to tighten, locking the filter into place **(Figure 18).** To remove the filter for cleaning, again hold the tank cover and turn the filter retainer counter-clockwise to loosen and remove **(Figure 19).** Slide the cartridge filter off the lid cage **(Figure 20).** To clean cartridge filter shake or brush off excess dirt **(Figure 21)** or rinse (from the inside of the filter) with water **(Figure 22).** Dry completely (approximately 24 hours) and reinstall. **NOTE:** If filter has been used for wet pick up, it must be cleaned and dried before using it for dry pick up.

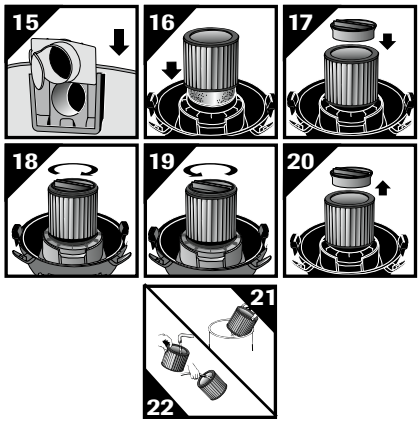

INSTALLING THE DISPOSABLE FILTER BAG FOR THE LARGE CAPACITY VACUUM
(Not Standard with All Models)

1. For use with large capacity vacuum only. Use for dry pick up only. Use in conjunction with cartridge filter for picking up soot, cement, plaster or drywall dust.
2. With cord disconnected from receptacle, pull latches on large tank cover in an outward motion and remove tank cover.
3. Unscrew hose locking-nut and remove hose from inlet **(Figure 23).**
4. Remove inlet deflector from deflector guide **(Figure 24). NOTE:** Hose must be removed before inlet deflector can be taken out.
5. With the opening of the inlet deflector facing the left or right side of the filter bag, slide filter bag collar over deflector matching notches of bag collar to tabs on inlet deflector, bag will only fit properly one way **(Figure 25).**
6. Slide deflector with collection bag attached into deflector guide **(Figure 26).**
7. Reinsert hose into inlet and tighten locking-nut **(Figure 27).**
8. When secured in place, expand bag and position around the inside of the tank.

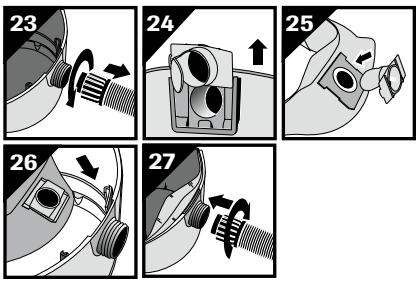

WET PICK UP OPERATION

Remove ALL dirt and debris found in the tank. The vacuum requires only a minimum of conversion when going from dry to wet pick-up. Remove any dry pick up only filtration. A clean cartridge filter may be used for vacuuming small amounts of liquids. For proper installation of the cartridge filter refer to Installing the Cartridge Filter. For best results when vacuuming large quantities of liquid, remove the cartridge filter. When vacuuming liquids containing debris, it is recommended to purchase a foam sleeve and install over filter cage; otherwise a foam sleeve is not required for wet pick up.

When using the portable vacuum, install foam sleeve or cartridge filter in position over the lid cage or remove filtration from lid cage. **NOTE:** For foam sleeve to fit properly on the portable vacuum lid cage the filter retainer must be installed. When using the large capacity vacuum, remove filtration from or install foam sleeve on portable vacuum. Install foam sleeve or cartridge filter in position over the lid cage or remove filtration from lid cage on large tank cover. Make sure inlet deflector is fully inserted into deflector guide on inside of tank. If it is not, install inlet deflector by sliding it downward into slot on deflector guide **(Figure 28) NOTE:** Hose must be removed before inlet deflector can be inserted into or removed from deflector guide. Opening on deflector guide can face either side of tank. Inlet deflector should always be in place for any type of cleaning. Misting in exhaust air may occur if the filter becomes saturated during wet pick up. If misting occurs, remove filter and allow to dry, or replace with another dry filter to eliminate the misting and possible dripping of liquid around the lid. Turn the unit off immediately upon completing a wet pick up job or when tank is full and ready to be emptied. Raise the hose to drain any excess liquid into the tank. The interior of both tanks should be periodically cleaned.

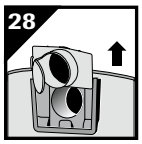

The foam sleeve should be cleaned periodically as described in the following steps:

a. Always disconnect the plug from the wall receptacle before removing the tank cover. Place tank cover in an upside down position. Remove foam sleeve by sliding it up and off the lid cage. **NOTE:** When using the portable vacuum the filter retainer must be removed before removing the foam sleeve.
b. Shake excess dust off foam sleeve with a rapid up and down movement.
c. Hold foam sleeve under running water for a minute or two, rinsing from the inside. A water wash is not always required, depending on the condition of the foam sleeve.
d. Gently wring out excess water, blot foam sleeve with a clean towel, and allow to dry. The foam sleeve is now ready to be reinstalled on the lid cage. **NOTE:** For foam sleeve to fit properly on the portable vacuum lid cage the filter retainer must be installed.

NOTE: Wet pick up accessories should be washed periodically with soap and water, especially after picking up wet, sticky liquids. Picking up detergent or cleaners that create foam or suds can defeat the vacuums filtration. This could cause foreign material to pass into the motor impeller area and shorten motor life. This is not normal use and is not covered by product warranty.

BLOWER FEATURE

This vacuum can be used as a powerful blower. To use your unit as a blower unscrew blower port cover located on the back-side of the motor housing **(Figure 29).** The blower port cover is equipped with a retaining strap to prevent loss of the port cover while blower is in use. Insert hose

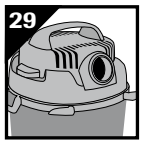

Models 1VHF9 and 1VHG1

Operation (continued)

end with locking-nut into blower port on rear of unit and tighten. Caution should be used when using as a blower due to the powerful force of air when using certain attachments.

⚠ WARNING

ALWAYS WEAR EYE PROTECTION TO PREVENT ROCKS OR DEBRIS FROM BEING BLOWN OR RICOCHETING INTO THE EYES OR FACE WHICH CAN RESULT IN SERIOUS INJURY.

AUTOMATIC SUCTION SHUT-OFF

The vacuum is equipped with an automatic suction shut-off that operates when picking up liquids. When using the portable vacuum, as the level of the liquid rises in the tank, an internal float rises until it seats itself against a seal at the intake of the motor, shutting off suction. When using the large capacity vacuum, as the level of the liquid rises in the tank, an internal float rises until it seats itself against a seal at the cover, shutting off suction. When this happens, the motor will develop a higher then normal pitch noise and the suction is drastically reduced. If this occurs, turn unit off immediately. Failure to turn unit off after float rises and shuts off suction will result in extensive damage to the motor. To continue use, empty the liquid waste from the tank as outlined in the following section.

NOTE: If accidentally tipped over, the vacuum could lose suction. If this occurs, turn unit off and place vac in upright position. This will allow the float to return to its normal position, and you will be able to continue operation.

EMPTYING LIQUID WASTE FROM THE TANK

PORTABLE VACUUM

Liquid waste may be emptied by removing the tank cover. To empty, stop the motor and remove the plug from the wall receptacle. Remove tank cover and deposit the liquid waste contents in a suitable drain. After tank is empty, return the cover to its original position. To continue use, plug the cord into the wall receptacle and turn unit on.

LARGE CAPACITY VACUUM

Liquid waste may be emptied by removing tank drain. To empty, turn unit off and remove plug from wall receptacle. Remove the drain cap and deposit the liquid waste contents in a suitable drain. After the tank is empty, return the drain cap to its original position. To continue use, plug the cord into the wall receptacle and turn the unit on.

Maintenance

⚠ WARNING

BE SURE TO DISCONNECT POWER SUPPLY BEFORE ATTEMPTING TO SERVICE OR REMOVE ANY COMPONENTS.

STORAGE

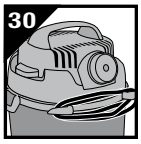

Before storing your vacuum cleaner, both tanks should be emptied and cleaned. Place portable vacuum in cradle of large tank cover and secure with securement arms. The power cord can be wrapped around the cord wraps provided on the large tank cover on rear of unit **(Figure 30). ALWAYS STORE THE VACUUM CLEANER INDOORS.**

LUBRICATION

No lubrication is necessary as the motor is equipped with lifetime lubrication bearings.

SERVICE

Do not attempt to service your Dayton wet/dry vacuum cleaner beyond that described in this manual. Refer all other servicing to a qualified service center.

⚠ WARNING

IF ANY OF THE MOTOR HOUSING PARTS SHOULD BECOME DETACHED OR BROKEN, EXPOSING THE MOTOR OR ANY OTHER ELECTRICAL COMPONENTS, OPERATION SHOULD BE DISCONTINUED IMMEDIATELY TO AVOID PERSONAL INJURY OR FURTHER DAMAGE TO THE VACUUM. REPAIRS SHOULD BE MADE BEFORE REUSING THE VACUUM.

ENGLISH

Dayton®

Dayton® Wet/Dry Vacuums

ENGLISH

Troubleshooting Chart

SYMPTOMS	POSSIBLE CAUSE(S)	CORRECTIVE ACTION
Parts/accessories missing	Packed in tank	Check in tank
Vacuum cleaner will not start	1. No power at receptacle 2. Motor does not run	1. Check for power 2. Replace motor
Dust discharging from exhaust	1. Filter not installed/not installed properly 2. Filter damaged 3. Filter clogged or dust is too fine 4. Filter not functional	1. Properly install filter 2. Replace filter 3. Use more efficient filter 4. Clean or replace filter
Loss of suction	1. Loose hose connection 2. Filter clogged 3. Full tank 4. Hole in hose	1. Tighten hose connection 2. Clean or replace filter 3. Empty tank 4. Replace hose
Misting in the exhaust air	1. Saturated filter	1. Replace saturated filter with a dry filter

LIMITED WARRANTY

DAYTON ONE-YEAR LIMITED WARRANTY. *DAYTON® MODELS COVERED IN THIS MANUAL ARE WARRANTED BY DAYTON ELECTRIC MFG. CO. (DAYTON) TO THE ORIGINAL USER AGAINST DEFECTS IN WORKMANSHIP OR MATERIALS UNDER NORMAL USE FOR ONE YEAR AFTER DATE OF PURCHASE. ANY PART WHICH IS DETERMINED TO BE DEFECTIVE IN MATERIAL OR WORKMANSHIP AND RETURNED TO AN AUTHORIZED SERVICE LOCATION, AS DAYTON DESIGNATES, SHIPPING COSTS PREPAID, WILL BE, AS THE EXCLUSIVE REMEDY, REPAIRED OR REPLACED AT DAYTON'S OPTION. FOR LIMITED WARRANTY CLAIM PROCEDURES, SEE "PROMPT DISPOSITION" BELOW. THIS LIMITED WARRANTY GIVES PURCHASERS SPECIFIC LEGAL RIGHTS WHICH VARY FROM JURISDICTION TO JURISDICTION.*

LIMITATION OF LIABILITY. *TO THE EXTENT ALLOWABLE UNDER APPLICABLE LAW, DAYTON'S LIABILITY FOR CONSEQUENTIAL AND INCIDENTAL DAMAGES IS EXPRESSLY DISCLAIMED. DAYTON'S LIABILITY IN ALL EVENTS IS LIMITED TO AND SHALL NOT EXCEED THE PURCHASE PRICE PAID.*

WARRANTY DISCLAIMER. *A DILIGENT EFFORT HAS BEEN MADE TO PROVIDE PRODUCT INFORMATION AND ILLUSTRATE THE PRODUCTS IN THIS LITERATURE ACCURATELY; HOWEVER, SUCH INFORMATION AND ILLUSTRATIONS ARE FOR THE SOLE PURPOSE OF IDENTIFICATION, AND DO NOT EXPRESS OR IMPLY A WARRANTY THAT THE PRODUCTS ARE MERCHANTABLE, OR FIT FOR A PARTICULAR PURPOSE, OR THAT THE PRODUCTS WILL NECESSARILY CONFORM TO THE ILLUSTRATIONS OR DESCRIPTIONS. EXCEPT AS PROVIDED BELOW, NO WARRANTY OR AFFIRMATION OF FACT, EXPRESSED OR IMPLIED, OTHER THAN AS STATED IN THE "LIMITED WARRANTY" ABOVE IS MADE OR AUTHORIZED BY DAYTON.*

Technical Advice and Recommendations, Disclaimer. *Notwithstanding any past practice or dealings or trade custom, sales shall not include the furnishing of technical advice or assistance or system design. Dayton assumes no obligations or liability on account of any unauthorized recommendations, opinions or advice as to the choice, installation or use of products.*

Product Suitability. *Many jurisdictions have codes and regulations governing sales, construction, installation, and/or use of products for certain purposes, which may vary from those in neighboring areas. While attempts are made to assure that Dayton products comply with such codes, Dayton cannot guarantee compliance, and cannot be responsible for how the product is installed or used. Before purchase and use of a product, review the product applications, and all applicable national and local codes and regulations, and be sure that the product, installation, and use will comply with them.*

Certain aspects of disclaimers are not applicable to consumer products; e.g., (a) some jurisdictions do not allow the exclusion or limitation of incidental or consequential damages, so the above limitation or exclusion may not apply to you; (b) also, some jurisdictions do not allow a limitation on how long an implied warranty lasts, consequently the above limitation may not apply to you; and (c) by law, during the period of this Limited Warranty, any implied warranties of implied merchantability or fitness for a particular purpose applicable to consumer products purchased by consumers, may not be excluded or otherwise disclaimed.

Prompt Disposition. *A good faith effort will be made for prompt correction or other adjustment with respect to any product which proves to be defective within limited warranty. For any product believed to be defective within limited warranty, first write or call dealer from whom the product was purchased. Dealer will give additional directions. If unable to resolve satisfactorily, write to Dayton at address below, giving dealer's name, address, date, and number of dealer's invoice, and describing the nature of the defect. Title and risk of loss pass to buyer on delivery to common carrier. If product was damaged in transit to you, file claim with carrier.*

Manufactured for Dayton Electric Mfg. Co., 100 Grainger Parkway, Lake Forest, Illinois 60045-5201 U.S.A

For Repair Parts, call 1-800-323-0620

24 hours a day – 365 days a year

Please provide following information:
-Model number
-Serial number (if any)
-Part description and number as shown in parts list

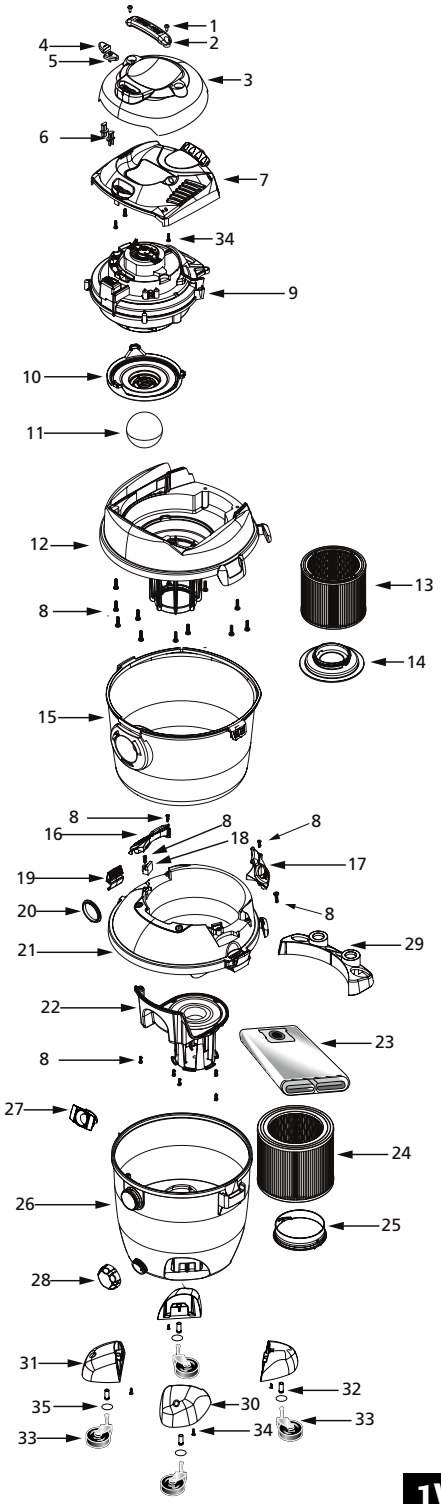

1VHF9

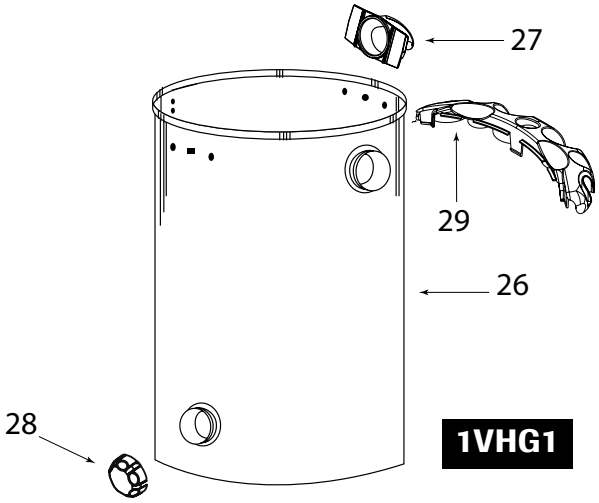

1VHG1

ENGLISH

Dayton® Wet/Dry Vacuums

ENGLISH

Repair Parts List

Reference Number	Description	Part Number for Models: 1VHF9	1VHG1	Qty
1	Screw ¼ x 1.5” Trilobe PH Pan	1517499	1517499	2
2	Handle	1944475	1944475	1
3	Outer Motor Cover	3740556	3740556	1
4	Switch Button - I	7414200	7414200	1
5	Switch Button - O	7414210	7414210	1
6	Switch Button Extension	7414250	7414250	2
7	Inner Motor Cover	3741054	3741054	1
8	Screw 10 x ¾ Trilobe	1517699	1517699	19
9	† Power Unit Assembly	1944476	1944476	1
10	Grid Plate	8866010	8866010	1
11	Ball Float	0081120	0081120	1
12	Lid Cage	1944446	1944615	1
13	Cartridge Filter	4TB95	4TB95	1
14	Filter Retainer (Included in 4TB95)	3183000	3183000	1
15	Tank Assembly	1095697	1095697	1
16	Securement Arm - Left	3540721	3540721	1
17	Securement Arm - Right	3540701	3540701	1
18	Stop	3540751	3540751	2
19	Lid Latch	7444500	7444500	2
20	Inlet Gasket	2075000	2075000	1
21	Cradle Assembly (Includes 8, 16-20)	1944447	1944447	1
22	Filter Cage Assembly	1944433	1944433	1
23	Collection Bag	1UG85	1UG85	1
24	Cartridge Filter	2W435	2W435	1
25	Filter Retainer	3008000	3008000	1
26	Tank Assembly	1095797	1095897	1
27	Inlet Deflector	7413120	7413120	1
28	Drain Cover	7446800	7446800	1
29	Tool holder	8411300	8412000	1
30	Casterfoot A (Includes #32)	7431320	N/A	2
31	Casterfoot B (Includes #32)	7431370	N/A	2
32	Retainer	8565750	N/A	4
33	Caster	6773900	N/A	4
34	#10 x ¾” Screw Hex Head	* 1503999	* 1503999	7/3
35	Flatwasher	0704399	N/A	4
△	2½” x 8’ Hose	2Z212	2Z212	1
△	2½” Dia. Extension Wands	0150400	0150400	2
△	14” Floor Nozzle	0213696	0213696	1
△	2½” Dia. Utility Nozzle	5281500	5281500	1
△	2½” Dia. Crevice Tool	0160400	0160400	1
△	Elbow Grip	0223000	0223000	1
△	4’ x 1¼” Hose	5330105	5330105	1
△	1¼” Dia. Utility Nozzle	0303501	0303501	1
△	1¼” Dia. Crevice Tool	0313001	0313001	1

(*) Standard hardware item, available locally.
(△) Not shown.
(†) Replacement parts not available for power unit.

Do not attempt to service your Dayton vacuum beyond that described in the Operating Instructions and Parts Manual.

Models 1VHF9 and 1VHG1

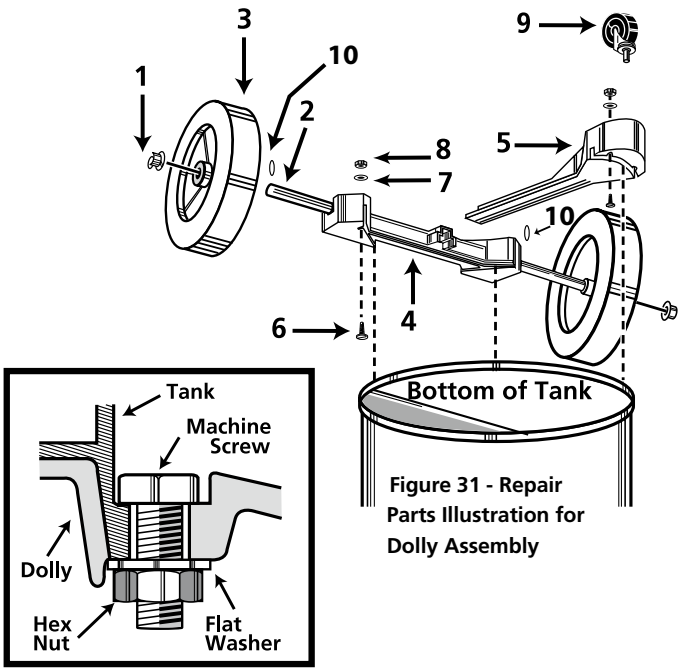

Figure 31 - Repair Parts Illustration for Dolly Assembly

Dolly Repair Parts list

Reference Number	Description	Part Number	Qty.
1	▪ Cap nut	4300299	2
2	Axle	2441900	1
3	Wheel	2420900	2
4	Rear frame	9392496	1
5	Front frame	9393050	1
6	▪ ¼"- 20 x ¾"Lg. Screw	* 0902999	4
7	▪ ¼" Flatwasher	* 0700399	4
8	▪ ¼" Hex Nut	* 1300199	4
9	▪ Caster	6775200	1
10	▪ ½" Flatwasher	* 0703499	2

(*) Standard hardware item, available locally.
(▪) 4210696 Caster and hardware package

NOTE: The complete assembled dolly is not available.

ENGLISH

Dolly Assembly

1. Remove head from tank and place tank upside down on a flat surface.
2. Place wheels on rear frame/axle assembly with extended hub towards dolly frame and place cap nut on axle. Secure with hammer.
3. Place groove in front frame into lip of tank and position so frame is directly above inlet.
4. Position grooves of rear frame on lip of tank and align so rear and front frames engage.
5. Secure dolly frame to tank by placing hex head screws up through holes in dolly frame. Ensure head of screw is fully recessed in area provided. After machine screw is inserted, tighten with flatwasher and hex nut.
6. Insert caster in caster socket and apply downward pressure until caster snaps into place.
7. Stand vacuum up on dolly. Place metal carriage handle between tank and plastic side handles, and fasten tightly with screws provided. Be sure to spread ends of carriage handle when assembling to prevent damage to tank **(Figure 32).**

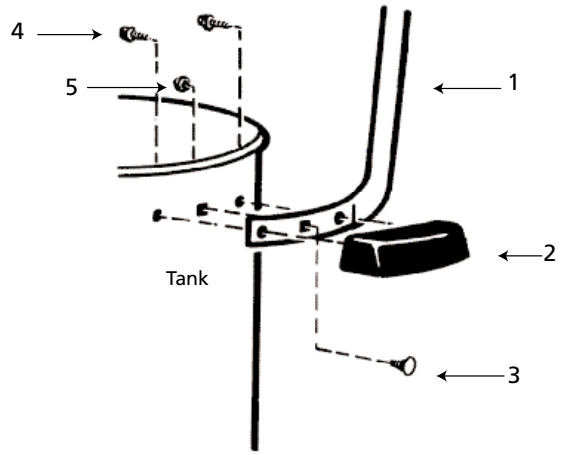

Figure 32 — Repair Parts Illustration for Handle Assembly

Handle Repair Parts List

Reference Number	Description	Part Number	Qty.
1	Metal tank handle	2088100	1
2	Plastic tank handle	9355100	2
3	¼ - 20 x ½" Bolt	* 6401299	2
4	#10 x ¾" lg. Screw	* 1503999	4
5	¼"- 20 Hex nut	* 1300199	2

(*) Standard hardware item, available locally.

Notes

ENGLISH