marathon®

General Purpose Motors

Model No: 213TTFBA6003
Catalog No: GT1215

General Purpose Motor, 7.50 & 5 HP, 3 Ph, 60 & 50 Hz, 230/460 & 190/380 V, 3600 RPM, 213TC Frame, TEFC

©2026 Marathon, All Rights Reserved.

marathon®

Product Information Packet: Model No: 213TTFBA6003, Catalog No: GT1215 General Purpose Motor, 7.50 & 5 HP, 3 Ph, 60 & 50 Hz, 230/460 & 190/380 V, 3600 RPM, 213TC Frame, TEFC

Nameplate Specifications

Phase	**3**	Output HP	**7.50 & 5 Hp**
Output KW	**5.6 & 3.7 kW**	Voltage	**230/460 & 190/380 V**
Speed	**3525 & 2930 r/min**	Synchronous RPM	**3600 & 3000 r/min**
Service Factor	**1.15 & 1.0**	Frame	**213TC**
Enclosure	**Totally Enclosed Fan Cooled**	Thermal Protection	**No Protection**
Efficiency	**89.5 & 91 %**	Ambient Temperature	**40 °C**
Frequency	**60 & 50 Hz**	Current	**17.8/8.9 & 14.4/7.2 A**
Power Factor	**88**	Duty	**Continuous**
Insulation Class	**F**	Design Code	**A**
KVA Code	**G**	Drive End Bearing Size	**6307**
Opp Drive End Bearing Size	**6206**	UL	**Recognized**
CSA	**Y**	CE	**Y**
IP Code	**43**	Number of Speeds	**1**

Technical Specifications

Electrical Type	**Squirrel Cage Inverter Rated**	Starting Method	**Line Or Inverter**
Poles	**2**	Rotation	**Reversible**
Resistance Main	**.805 O**	Mounting	**Rigid Base**
Motor Orientation	**Horizontal**	Drive End Bearing	**Ball**
Opp Drive End Bearing	**Ball**	Frame Material	**Rolled Steel**
Shaft Type	**T**	Overall Length	**19.53 in**
Shaft Diameter	**1 3/8 in**	Shaft Extension	**3.37 in**
Assembly/Box Mounting	**F1/F2 Capable**	Inverter Load	**Constant 10:1**

Drawings

Connection Drawing	**A-EE7308**	Outline Drawing	**SS620297-213TC**

This is an uncontrolled document once printed or downloaded and is subject to change without notice. Date Created: 16/10/2026

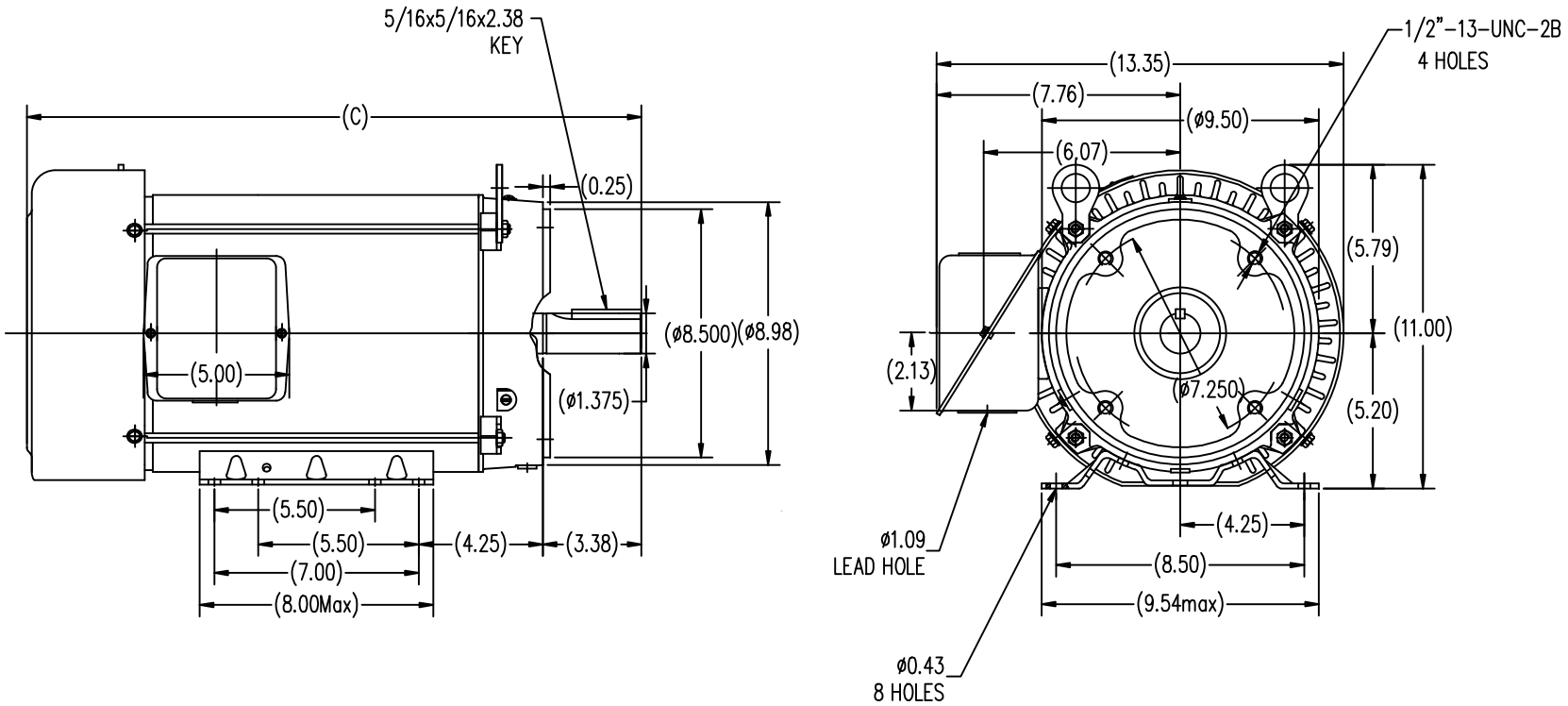

213TC	19.53
215TC	21.02
FRAME	C

NO.	REVISION	BY & DATE	CHK

TOLERANCES UNLESS SPECIFIED

DEC.	INCHES
.X	±.1
.XX	±.03
.XXX	±.005
.XXXX	±.0005
ANG	±1/2

REGAL-BELOIT CORPORATION

TITLE: OUTLINE
NEMA-PREMIUM TTFBA 213T/215TC

MAT'L.

FINISH

RFP

DIST

CAD FILE: SS620297

DRAWN	SY 04-16-2010
CHK	HZJ 04-16-2010
APPD	CL 04-16-2010
SCALE	1=4
REF	
FMF	HWADA
PREV	

SIZE: B

DRAWING NO.: SS620297

REV.:

THIS DRAWING IN DESIGN AND DETAIL IS OUR PROPERTY AND MUST NOT BE USED EXCEPT IN CONNECTION WITH OUR WORK ALL RIGHTS OF DESIGN AND INVENTION ARE RESERVED
THIS IS AN ELECTRONICALLY GENERATED DOCUMENT – DO NOT SCALE THIS PRINT

Uncontrolled Copy

THREE PHASE
DUAL VOLTAGE MOTOR

HIGH VOLTAGE

(U1) T1 — L1
(V1) T2 — L2
(W1) T3 — L3
(U2) T4
(U3) T7
(V2) T5
(V3) T8
(W2) T6
(W3) T9

LOW VOLTAGE

(U1) T1
(U3) T7 — L1
(V1) T2
(V3) T8 — L2
(W1) T3
(W3) T9 — L3
(U2) T4
(V2) T5
(W2) T6

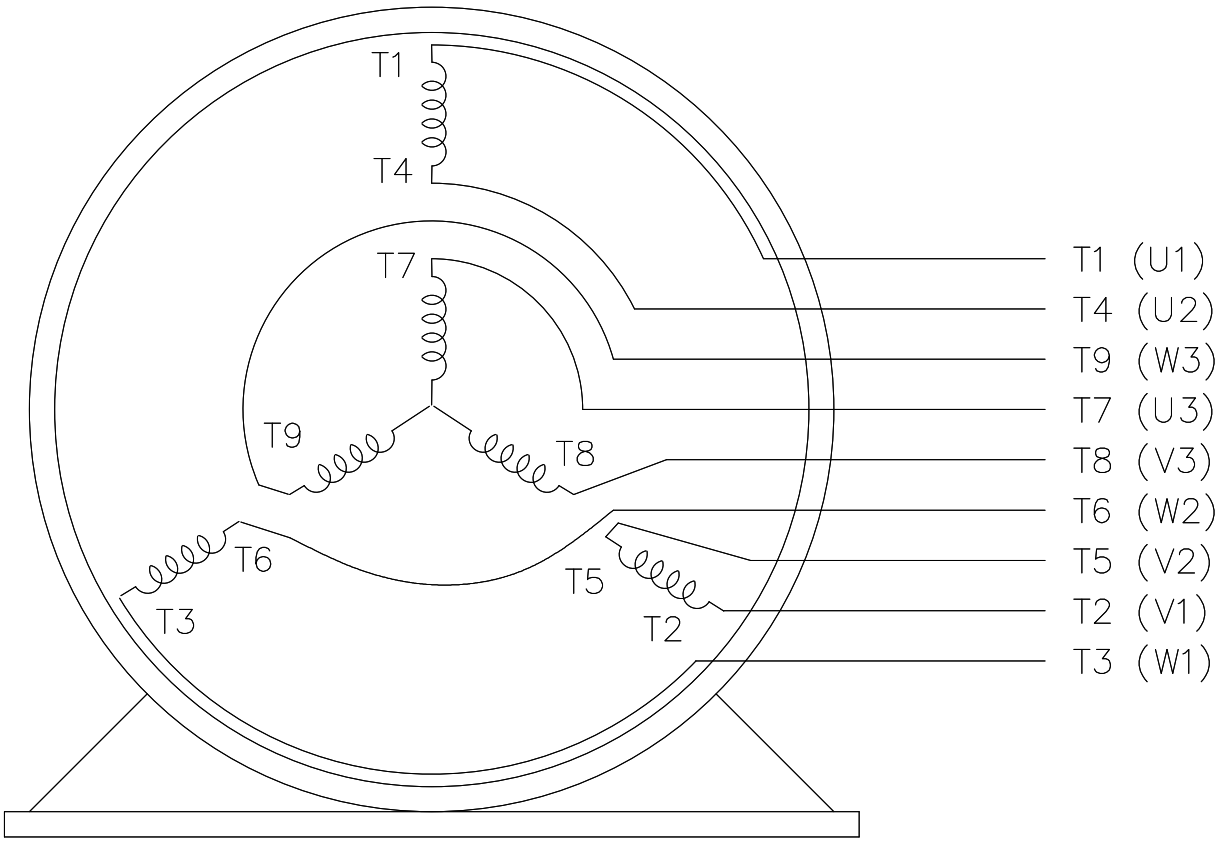

VIEW OF TERMINAL END

REF.
WINDING DIAGRAM

T8Y, T2Y, T2BL, T4BX, T2EC, T2G
T6BZ, T2B, T6BL, T4AV, T6B, T4B

OPTIONAL CORD CONNECTION

L1 — WHITE
L2 — RED
L3 — BLACK

DRAWING REVISION	REVISION BY	REV DATE/ © DATE
J	SB	08/01/2025
REQUEST NUMBER	APPROVED BY	DATE
CR-0023654	SBD	08/01/2025

REQUEST NUMBER DESCRIPTION
DRAWING TITLE BLOCK UPDATED

COPYRIGHT (PER REVISION DATE) MARATHON ELECTRIC, LLC. ALL RIGHTS RESERVED. PROPRIETARY AND CONFIDENTIAL INFORMATION - THIS DOCUMENT IS THE PROPERTY OF MARATHON ELECTRIC, LLC. ("OWNER") AND CONTAINS OWNER'S PROPRIETARY INFORMATION. ANY PERSON, CORPORATION OR OTHER FIRM RECEIVING IT IS DEEMED, BY RECEIVING IT, TO AGREE THAT IT, AND/OR ANY PART OF IT, SHALL NOT BE DISCLOSED TO ANY PERSON, CORPORATION OR OTHER ENTITY, DUPLICATED, AND/OR USED, EXCEPT AS EXPRESSLY APPROVED IN WRITING IN ADVANCE BY OWNER. THIS DOCUMENT SHALL BE RETURNED TO OWNER UPON REQUEST. IT MAY BE SUBJECT TO CERTAIN RESTRICTIONS UNDER APPLICABLE EXPORT CONTROL LAWS AND REGULATIONS.

PRIMARY DIMENSIONS ARE INCH
mm DIMENSIONS IN [BRACKETS]
ARE FOR REFERENCE ONLY

DRAWN BY	RM
DATE	11/20/1990
APPROVED BY	SAS
DATE	04/24/2003
REFERENCE	
THIRD ANGLE PROJECTION	

marathon™

DESCRIPTION
CONN DIAGRAM-EXTERNAL
3Ø - DUAL VOLTAGE MOTOR

MATERIAL	PROCESS/FINISH

SIZE	DRAWING NUMBER	SHEET
A	4 of 6 EE7308	1 OF 1

Uncontrolled Copy

Data Sheet

Date: 6/20/2017
Customer:
Attention:
Submitted by: FAREEDA DUDEKULA

marathon electric

213TTFBA6003

Submittal

Data @ 460 V

Motor Load Data

Load	0%	25%	50%	75%	100%	115%	125%	LR	
Current (Amps)	3.0	3.6	5.0	6.8	8.9	9.9	10.9	58.0	
Torque (ft-lb)	0.00	2.80	5.5	8.3	11.2	12.9	14.1	22.8	
RPM	3600	3580	3555	3535	3525	3,510	3490	0	
Efficiency (%)		87.5	88.5	89.5	89.5	89.5	89.5		
P.F. (%)	7.0	55.0	75.5	84.0	88.0	89.0	89.5	42.5	

Motor Speed Data

	LR	Pull-Up	BD	Rated	Idle
Speed (RPM)	0	500	3040	3525	3600
Current (Amps)	58.0	57.0	37.0	8.9	3.0
Torque (ft-lb)	22.8	25.0	26.8	11.2	0.00

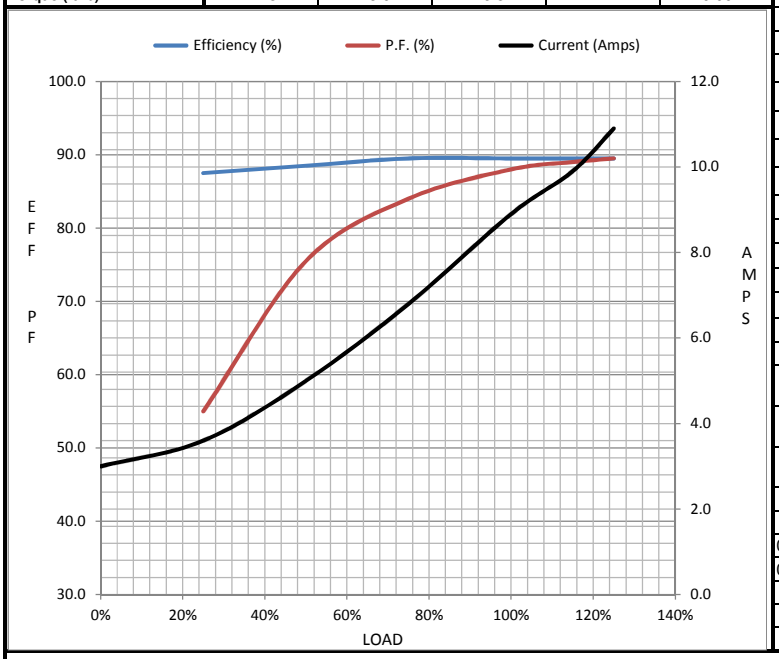

Information Block

HP	7.5
Sync. RPM	3600
Frame	213
Enclosure	TEFC
Construction	TFC
Voltage	230/460#190/380 V
Frequency	60 Hz
Design	B
LR Code letter	G
Service Factor	1.15
Temp Rise @ FL	40 ° C
Duty	CONT
Ambient	40 ° C
Elevation	1,000 feet
Rotor/Shaft wk²	0.32 Lb-Ft²
Ref Wdg	CHT21320005 NONE
Sound Pressure @ 1M	72 dBA
VFD Rating	CONSTANT 10:1
Outline Dwg	B-SS620297
Conn. Diag	A-EE7308
Additional Specifications:	
0	
0	

EQUIV CKT (OHMS / PHASE)

R1	R2	X1	X2	Xm
0.4910	0.4160	1.7770	1.6250	75.0330

Speed -Torque Curve

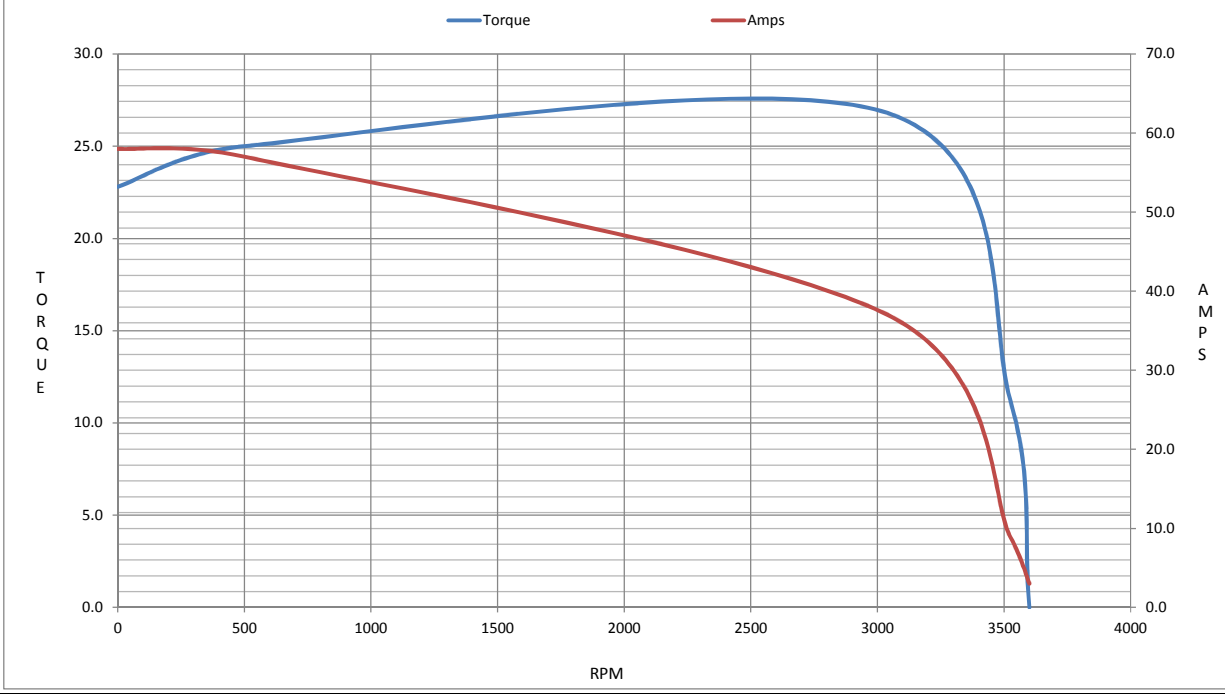

Uncontrolled Copy

CERTIFICATION DATA SHEET

Model#:	213TTFBA6003 BA	**WINDING#:**	CHT21320005 NONE 1
CONN. DIAGRAM:	A-EE7308	**ASSEMBLY:**	F1/F2 CAPABLE
OUTLINE:	B-SS620297		

TYPICAL MOTOR PERFORMANCE DATA

HP	KW	SYNC. RPM	F.L. RPM	FRAME	ENCLOSURE	KVA CODE	DESIGN
7 1/2&5	5.60&3.70	3600	3525&2930	213TC	TEFC	G	A

PH	Hz	VOLTS	FL AMPS	START TYPE	DUTY	INSL	S.F	AMB°C	ELEVATION
3	60/50	230/460#190/380	17.8/8.9&14.4/7.2	LINE OR INVERTER	CONTINUOUS	F7	1.15/1.0	40	3300

FULL LOAD EFF: 89.5&91	3/4 LOAD EFF: 89.5	1/2 LOAD EFF: 88.5	GTD. EFF	ELEC. TYPE	NO LOAD AMPS
FULL LOAD PF: 88&85.5	3/4 LOAD PF: 84	1/2 LOAD PF: 75.5	88.5	SQ CAGE INV RATED	6 / 3

F.L. TORQUE	LOCKED ROTOR AMPS	L.R. TORQUE	B.D. TORQUE	F.L. RISE°C
11.2 LB-FT	116 / 58	22.8 LB-FT 205	26.8 LB-FT 240	40

SOUND PRESSURE @ 3 FT.	SOUND POWER	ROTOR WK^2	MAX. WK^2	SAFE STALL TIME	STARTS /HOUR	APPROX. MOTOR WGT
72 dBA	82 dBA	0.32 LB-FT^2	12 LB-FT^2	20 SEC.	2	146 LBS.

*** SUPPLEMENTAL INFORMATION ***

DE BRACKET TYPE	ODE BRACKET TYPE	MOUNT TYPE	ORIENTATION	SEVERE DUTY	HAZARDOUS LOCATION	DRIP COVER	SCREENS	PAINT
C-FACE	STANDARD	RIGID	HORIZONTAL	FALSE	NONE	FALSE	NONE	BLUE (ENAMEL)

BEARINGS		GREASE	SHAFT TYPE	SPECIAL DE	SPECIAL ODE	SHAFT MATERIAL	FRAME MATERIAL
DE	OPE						
BALL 6307	BALL 6206	POLYREX EM	T	NONE	NONE	1045 HOT ROLLED (C-204)	ROLLED STEEL

THERMO-PROTECTORS				THERMISTORS	CONTROL	SPACE /n HEATERS
THERMOSTATS	PROTECTORS	WDG RTDs	BRG RTDs			
NONE	NOT	NONE	NONE	NONE	FALSE	NONE VOLTS

If Inverter equals NONE, contact factory for further information

INVERTER TORQUE: CONSTANT 10:1
INV. HP SPEED RANGE: NONE

ENCODER: NONE
NONE NONE
NONE NONE PPR

BRAKE: NONE NONE
NONE P/N NONE
NONE NONE
NONE FT-LB NONE V NONE Hz

*
N
O
T
E
S
*

DATE: 06/22/2017 05:15:09 AM
FORM 3531 REV.3 02/07/99
** Subject to change without notice.