ABB BALDOR RELIANCE

Customer information packet

35X095M774G1

2HP, 3490RPM, 3PH, 60HZ, 56C, 3526M, TEFC, F3, N
Class - None
Division - Not Applicable

Copyright © All product information within this document is subject to ABB Motors and Mechanical Inc. copyright © protection, unless otherwise noted.
11/5/2026 3:44:27 PM

Specifications

Enclosure	TEFC
Frame	56C
Frame Material	Steel
Frequency	60.00 Hz
Haz Area Class and Group	None
Haz Area Division	Not Applicable
Motor Letter Type	Three Phase
Output @ Frequency	2.000 HP @ 60 HZ
Phase	3
Synchronous Speed @ Frequency	3600 RPM @ 60 HZ
Voltage @ Frequency	208.0 V @ 60 HZ
	230.0 V @ 60 HZ
	460.0 V @ 60 HZ
Agency Approvals	CSA EEV
	CSA
	UR
Ambient Temperature	40 °C
Auxiliary Box	NO AUXILLARY BOX
Auxiliary Box Lead Termination	None
Base Indicator	Rigid
Bearing Grease Type	Polyrex EM (-20F +300F)
Blower	None
Current @ Voltage	2.500 A @ 460.0 V
	5.000 A @ 230.0 V
	5.300 A @ 208.0 V
Design Code	B
Drip Cover	No Drip Cover
Duty Rating	CONT
Efficiency @ 100% Load	85.5 %
Electrically Isolated Bearing	Not Electrically Isolated
Feedback Device	NO FEEDBACK
Front Face Code	Standard

Part Detail

Revision	H
Type	AC
Mech. spec.	35X095
Base	
Status	PRD/A
Elec. spec.	35WGM774
Layout	35LYX095
Eff. date	07-31-2024
CD Diagram	CD0005
Poles	02
Leads	9#18
Proprietary	False
Created date	09-26-2016

Front Shaft Indicator	None
Heater Indicator	No Heater
High Voltage Full Load Amps	2.5 a
Insulation Class	F
Inverter Code	Inverter Ready
KVA Code	M
Lifting Lugs	No Lifting Lugs
Locked Bearing Indicator	Locked Bearing
Motor Lead Exit	Ko Box
Motor Lead Quantity/Wire Size	9 @ 18 AWG
Motor Lead Termination	Flying Leads
Motor Standards	NEMA
Motor Type	3526M
Mounting Arrangement	F3
Number of Poles	2
Overall Length	13.22 IN
Power Factor	88
Product Family	Wash Down
Pulley End Bearing Type	Sealed Bearing
Pulley Face Code	C-Face
Pulley Shaft Indicator	Standard
Rodent Screen	None
RoHS Status	ROHS COMPLIANT
Service Factor	1.15
Shaft Diameter	0.625 IN
Shaft Extension Location	Pulley End
Shaft Ground Indicator	No Shaft Grounding
Shaft Rotation	Reversible
Shaft Slinger Indicator	Shaft Slinger
Speed	3490 rpm
Speed Code	Single Speed
Starting Method	Direct on line
Thermal Device - Bearing	None
Thermal Device - Winding	None

Vibration Sensor Indicator	No Vibration Sensor
Winding Thermal 1	None
Winding Thermal 2	None

Nameplate

NP1669L											
CAT.NO.											
SPEC.	35X095M774G1										
HP	2										
VOLTS	208-230/460										
AMP	5.3-5/2.5										
RPM	3490										
FRAME	56C		**HZ**	60			**PH**	3			
SER.F.	1.15	**CODE**	M	**DES**	B	**CLASS**	F				
NEMA-NOM-EFF	85.5	**PF**	88								
RATING	40C AMB-CONT										
CC	010A										
DE	6205		**ODE**	6203							
ENCL	TEFC	**SN**									
BLANK											

AC Induction Motor Performance Data
Record # 31837
Typical performance - not guaranteed values

Winding: 35WGM774-R001	**Type:** 3526M	**Enclosure:** TEFC

Nameplate Data				**460 V, 60 Hz: High Voltage Connection**	
Rated Output (HP)			2	**Full Load Torque**	2.98 LB-FT
Volts			208-230/460	**Start Configuration**	direct on line
Full Load Amps			5.3-5/2.5	**Breakdown Torque**	14.2 LB-FT
R.P.M.			3490	**Pull-up Torque**	6.33 LB-FT
Hz	60	**Phase**	3	**Locked-rotor Torque**	11.2 LB-FT
NEMA Design Code	B	**KVA Code**	M	**Starting Current**	25.9 A
Service Factor (S.F.)			1.15	**No-load Current**	0.912 A
NEMA Nom. Eff.	85.5	**Power Factor**	88	**Line-line Res. @ 25ºC**	6.9119 Ω
Rating - Duty			40C AMB-CONT	**Temp. Rise @ Rated Load**	44°C
S.F. Amps				**Temp. Rise @ S.F. Load**	52°C
				Locked-rotor Power Factor	50
				Rotor inertia	0.0719 LB-FT2

Load Characteristics 460 V, 60 Hz, 2 HP

% of Rated Load	**25**	**50**	**75**	**100**	**125**	**150**	**S.F.**
Power Factor	55	75	84	88	90	91	89
Efficiency	74.3	83.5	85.9	86.4	85.9	84.8	86.1
Speed	3571.7	3546.5	3520.2	3492.1	3460.7	3425.5	3473
Line amperes	1.1	1.47	1.93	2.44	3	3.61	2.78

ABB Motors and Mechanical Inc.

WINDING # 35WGM774

2 HP 3 PH 60 HZ 3490 RPM 460 V 3526M

Typical performance - not guaranteed values.

TORQUES(LB-FT): PO=14.2 PU=6.33 LR=11.2 LRA=25.9

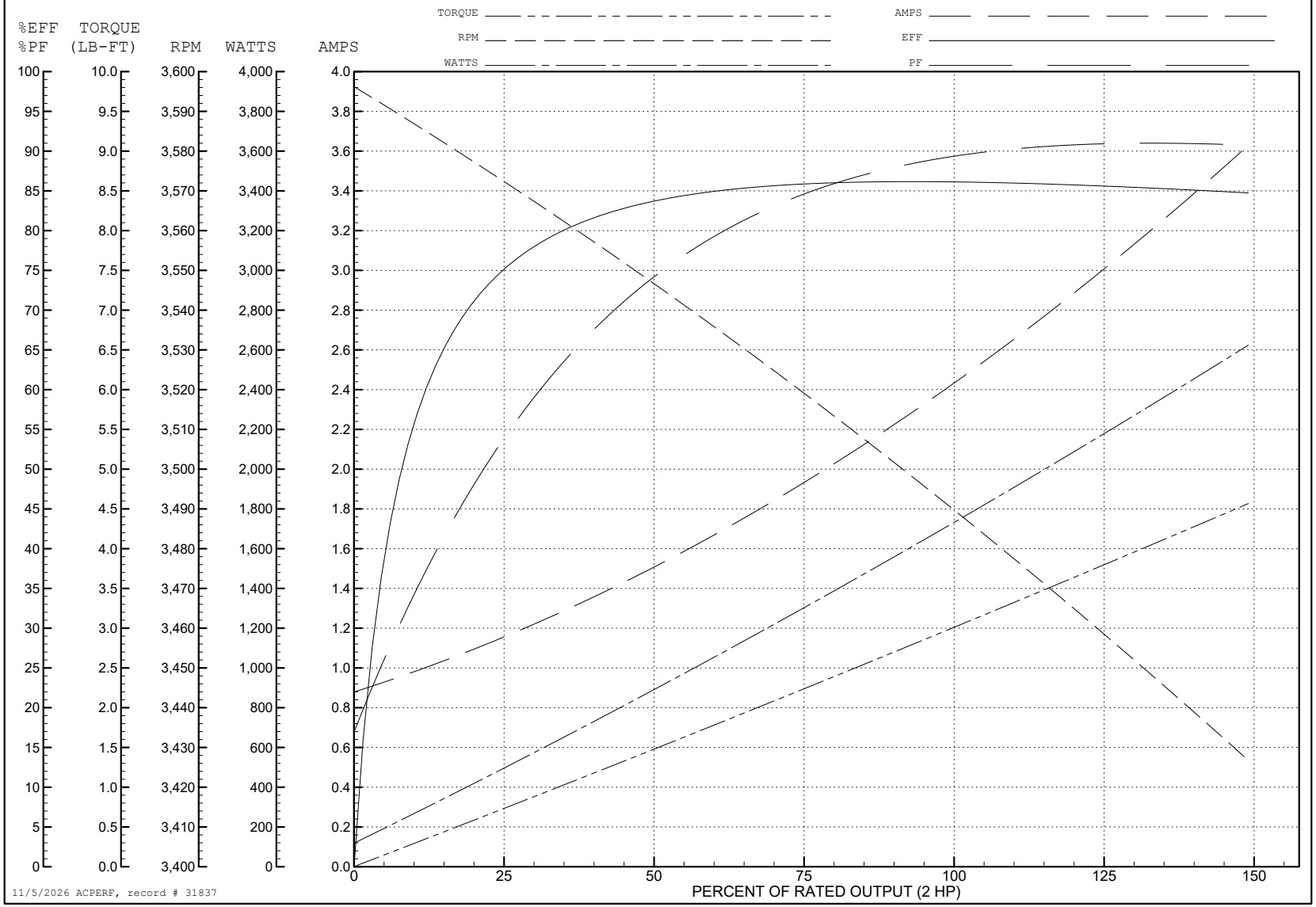

11/5/2026 ACPERF, record # 31837

35LYX095

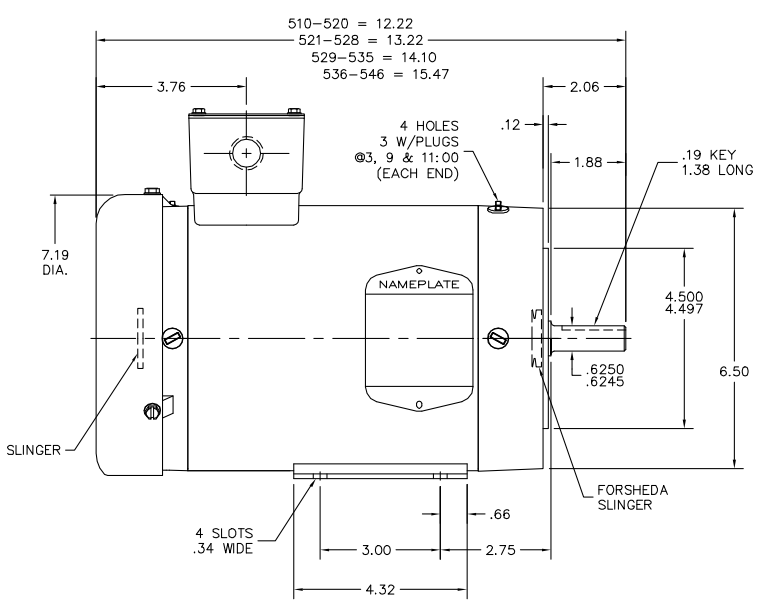

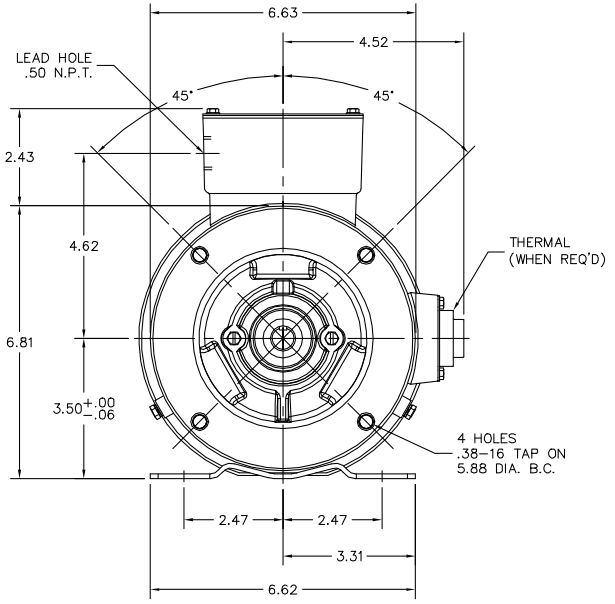

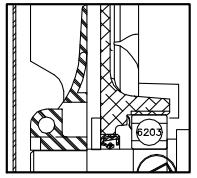

FRONT END DETAIL

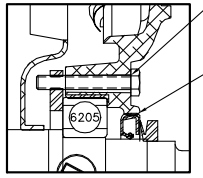

PULLEY END DETAIL

APPLY COAT OF SEALER UNDER RETAINER RING SCREW HEADS

APPLY COAT OF SEALER TO HOUSING BEFORE PRESSING IN SEALS ON EACH END

35LYX095

CUSTOMER IS RESPONSIBLE FOR DETERMINING THAT BALDOR'S PRODUCT WILL PERFORM SUITABLY IN THE INTENDED APPLICATION.

REV. DESC: UPDATE ENDPLATES AND NOTES		BALDOR - RELIANCE®
REV. LTR: B	VERSION: 02	TDR: 000001073391
FILE: \AAA\00153\080	REVISED: 11:16:57 06/04/2018	BY: FPJEFGO
MTL: –		HOR 56C TEFC M WD F3 W/SEALS EA END, W/35BA4010 (2 POLE)
		SH 1 of 1

CD0005

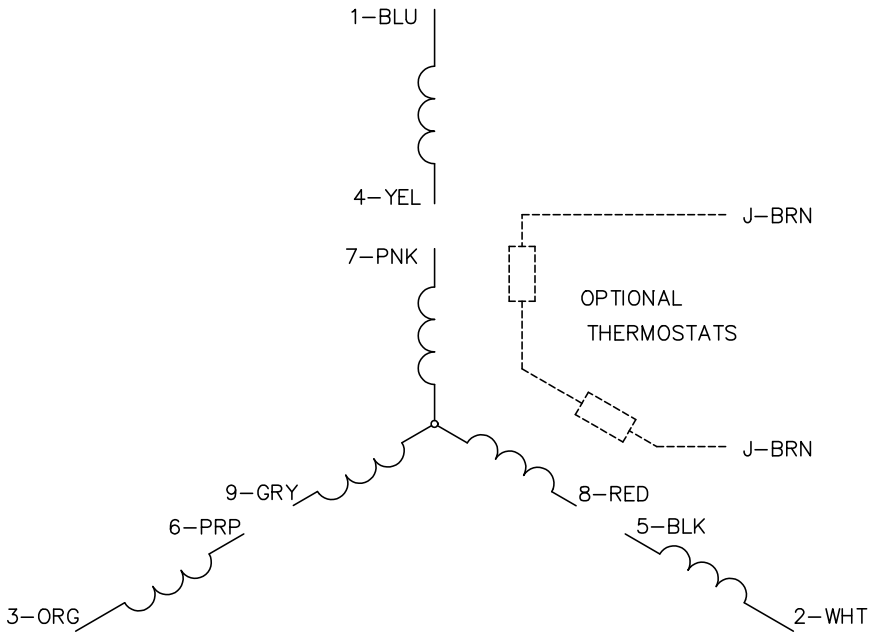

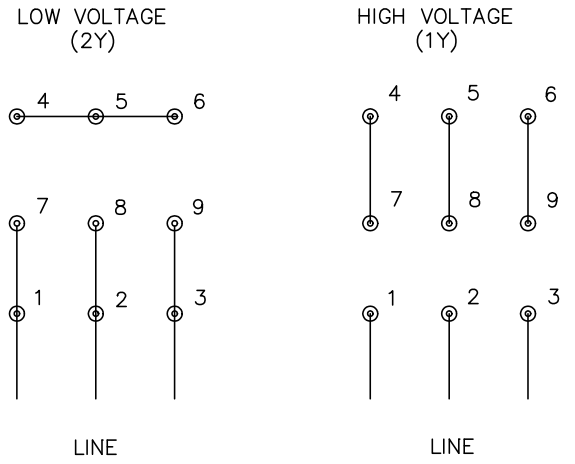

NOTES:

1. INTERCHANGE ANY TWO LINE LEADS TO REVERSE ROTATION.
2. OPTIONAL THERMOSTATS ARE PROVIDED WHEN SPECIFIED.
3. ACTUAL NUMBER OF INTERNAL PARALLEL CIRCUITS MAY BE A MULTIPLE OF THOSE SHOWN ABOVE.
4. LEAD COLORS ARE OPTIONAL. LEADS MUST ALWAYS BE NUMBERED AS SHOWN.

CD0005

REV. DESC: REVISE TO SHOW OPTIONAL COLORS			BALDOR ELECTRIC Co.
REV. LTR: E	BY: JLP	REVISED: 01/19/99 10:15	TDR: 0171435
CD0005		FILE: AAA00005140	MDL: –
		MTL: –	3PH, DV, 9 LEADS