marathon®

General Purpose Motors

Model No: 131781.00
Catalog No: 131781.00

General Purpose Motor, 5 HP, 1 Ph, 60 Hz, 208-230 V, 3600 RPM, 184TC Frame, DP

©2026 Marathon, All Rights Reserved.

marathon®

Product Information Packet: Model No: 131781.00, Catalog No: 131781.00 General Purpose Motor, 5 HP, 1 Ph, 60 Hz, 208-230 V, 3600 RPM, 184TC Frame, DP

Nameplate Specifications

Phase	**1**	Output HP	**5 Hp**
Output KW	**3.7 kW**	Voltage	**208-230 V**
Speed	**3490 r/min**	Synchronous RPM	**3600 r/min**
Service Factor	**1.15**	Frame	**184TC**
Enclosure	**Drip Proof**	Thermal Protection	**No Protection**
Efficiency	**80 %**	Ambient Temperature	**40 °C**
Frequency	**60 Hz**	Current	**23.0-22.2 A**
Power Factor	**92**	Duty	**Continuous**
Insulation Class	**F**	Design Code	**L**
KVA Code	**G**	Drive End Bearing Size	**6206**
Opp Drive End Bearing Size	**6205**	UL	**Recognized**
CSA	**Y**	CE	**Y**
IP Code	**22**	Number of Speeds	**1**

Technical Specifications

Electrical Type	**Capacitor Start Capacitor Run**	Starting Method	**Across The Line**
Poles	**2**	Rotation	**Selective Counterclockwise**
Resistance Main	**.37 O**	Mounting	**Rigid Base**
Motor Orientation	**Horizontal**	Drive End Bearing	**Ball**
Opp Drive End Bearing	**Ball**	Frame Material	**Rolled Steel**
Shaft Type	**T**	Overall Length	**14.7 in**
Frame Length	**10.5 in**	Shaft Diameter	**1 1/8 in**
Shaft Extension	**2.75 in**	Assembly/Box Mounting	**F1 Only**

Drawings

Connection Drawing	**005018.01**	Outline Drawing	**035502-1050**

This is an uncontrolled document once printed or downloaded and is subject to change without notice. Date Created: 13/10/2026

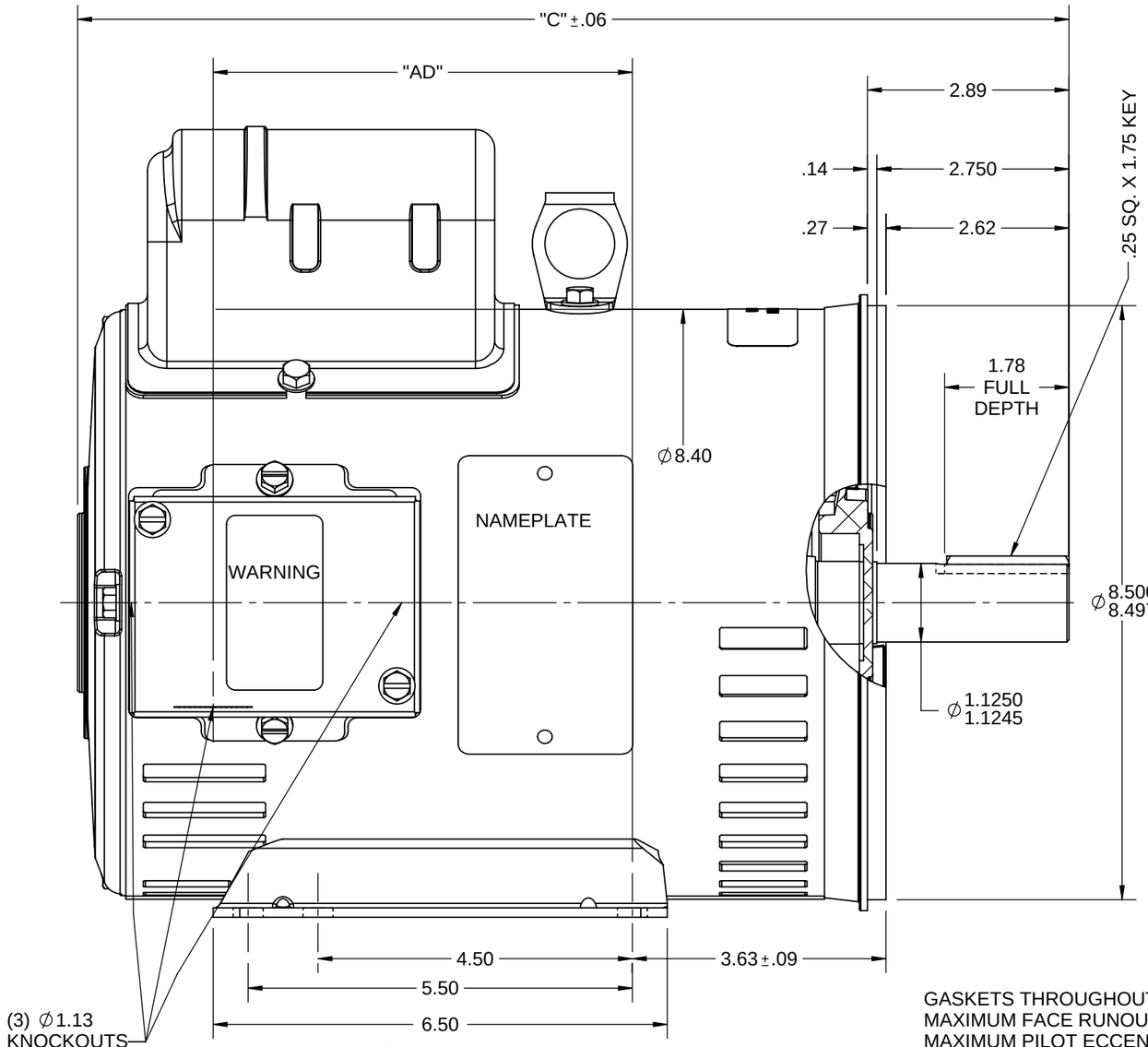

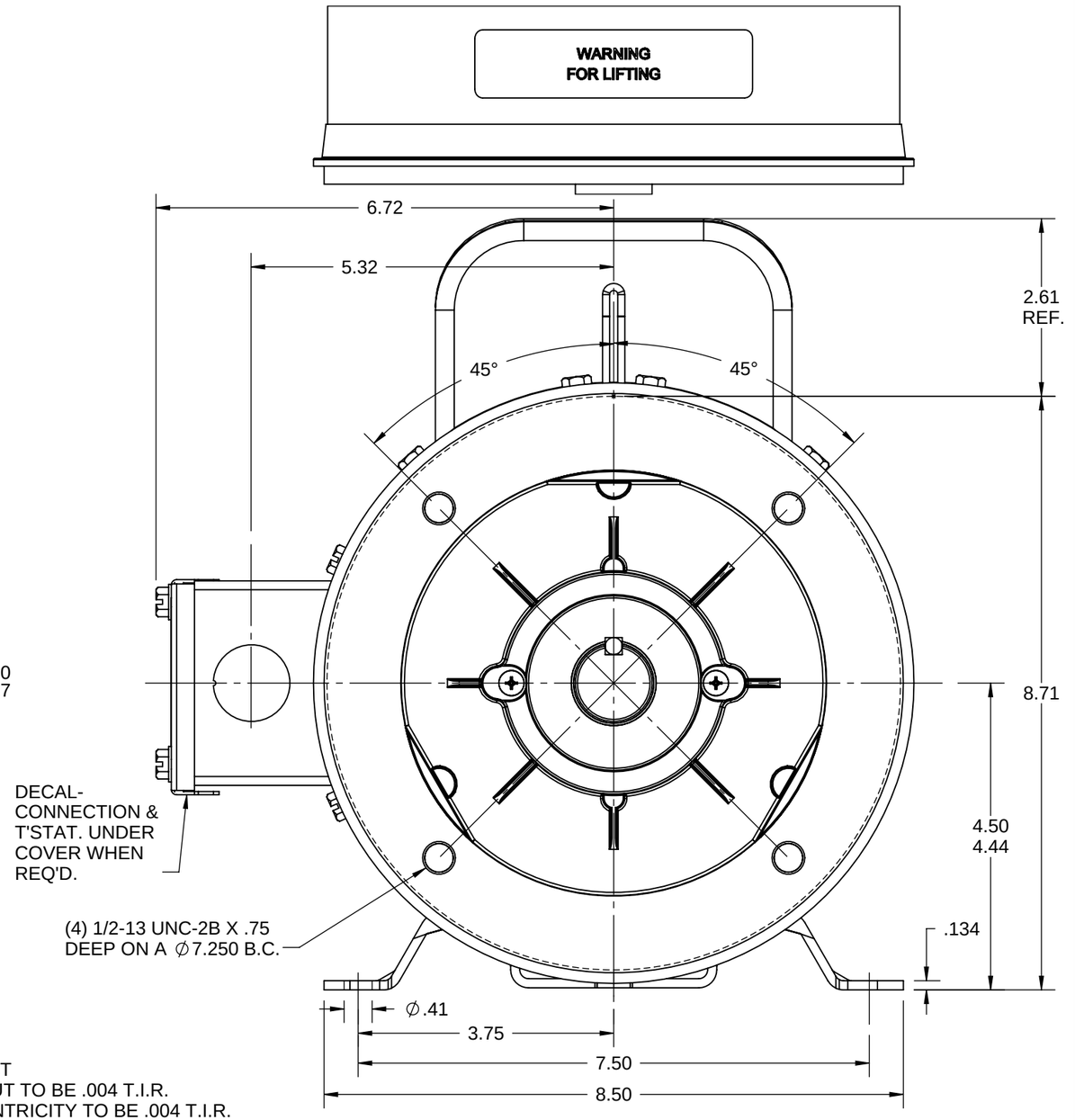

DASH NO.	"C"	"AD"
900	13.20	5.00
950	13.70	5.50
1000	14.20	6.00
1050	14.70	6.50
1100	15.20	7.00
1150	15.70	7.50
1200	16.20	8.00
1250	16.70	8.50

GASKETS THROUGHOUT
MAXIMUM FACE RUNOUT TO BE .004 T.I.R.
MAXIMUM PILOT ECCENTRICITY TO BE .004 T.I.R.
PERMISSIBLE SHAFT RUNOUT TO BE .002 T.I.R.

DRAWING REVISION	REVISION BY	REV DATE/© DATE
C	SB	06/03/2026
REQUEST NUMBER	APPROVED BY	DATE
CR-0026504	RMS	06/03/2026

REQUEST NUMBER DESCRIPTION
DRAWING TITLE BLOCK UPDATED

COPYRIGHT (PER REVISION DATE) MARATHON ELECTRIC, LLC. ALL RIGHTS RESERVED. PROPRIETARY AND CONFIDENTIAL INFORMATION - THIS DOCUMENT IS THE PROPERTY OF MARATHON ELECTRIC, LLC. ("OWNER") AND CONTAINS OWNER'S PROPRIETARY INFORMATION. ANY PERSON, CORPORATION OR OTHER FIRM RECEIVING IT IS DEEMED, BY RECEIVING IT, TO AGREE THAT IT, AND/OR ANY PART OF IT, SHALL NOT BE DISCLOSED TO ANY PERSON, CORPORATION OR OTHER ENTITY, DUPLICATED, AND/OR USED, EXCEPT AS EXPRESSLY APPROVED IN WRITING IN ADVANCE BY OWNER. THIS DOCUMENT SHALL BE RETURNED TO OWNER UPON REQUEST. IT MAY BE SUBJECT TO CERTAIN RESTRICTIONS UNDER APPLICABLE EXPORT CONTROL LAWS AND REGULATIONS.

TOLERANCES (EXCEPT AS NOTED):

DEC.	INCH	mm	ANGLE
.X	±0.1	[±3]	±0.5°
.XX	±0.03	[±0.8]	
.XXX	±0.005	[±0.13]	
.XXXX	±0.0005	[±0.013]	

REMOVE BURRS & BREAK SHARP EDGES: .003/.015 [.08/.38] X 45°
CORNER FILLETS: R.02 [.5]
MACHINED SURFACES: 125 INCH / 3.2 mm
mm DIMENSIONS IN [BRACKETS] ARE FOR REFERENCE ONLY

DRAWN BY	SW 5/10/05
DATE	
APPROVED BY	RDW 5/10/05
DATE	
REFERENCE	
THIRD ANGLE PROJECTION	

marathon™

DESCRIPTION
OUTLINE
DRIP PROOF - RIGID "C"

MATERIAL	PROCESS/FINISH
GENERAL PURPOSE	

SIZE	DRAWING NUMBER	SHEET
B	035502	1 OF 1