ABB BALDOR RELIANCE

Customer information packet

CEM3584T-5

1.5HP, 1768RPM, 3PH, 60HZ, 145TC, 0522M, TEFC
Class - None
Division - Not Applicable

Copyright © All product information within this document is subject to ABB Motors and Mechanical Inc. copyright © protection, unless otherwise noted.
11/5/2026 9:49:30 AM

Specifications

Enclosure	TEFC
Frame	145TC
Frame Material	Iron
Frequency	60.00 Hz
Haz Area Class and Group	None
Haz Area Division	Not Applicable
Motor Letter Type	Three Phase
Output @ Frequency	1.500 HP @ 60 HZ
Phase	3
Synchronous Speed @ Frequency	1800 RPM @ 60 HZ
Voltage @ Frequency	575.0 V @ 60 HZ
Agency Approvals	CURUSEEV
	NEMA PREMIUM
Ambient Temperature	40 °C
Auxiliary Box	NO AUXILLARY BOX
Auxiliary Box Lead Termination	None
Base Indicator	Rigid
Bearing Grease Type	Polyrex EM (-20F +300F)
Blower	None
Current @ Voltage	1.710 A @ 575.0 V
Design Code	B
Drip Cover	No Drip Cover
Duty Rating	CONT
Efficiency @ 100% Load	86.5 %
Electrically Isolated Bearing	Not Electrically Isolated
Feedback Device	NO FEEDBACK
Front Shaft Indicator	None
Heater Indicator	No Heater
High Voltage Full Load Amps	1.7 a
Insulation Class	F
Inverter Code	Inverter Ready
KVA Code	L

Part Detail

Revision	D
Type	AC
Mech. spec.	05C052
Base	
Status	PRD/A
Elec. spec.	05WGX559
Layout	05LYC052
Eff. date	04-29-2024
CD Diagram	CD0006
Poles	04
Leads	3#18
Proprietary	False
Created date	03-11-2022

Lifting Lugs	Standard Lifting Lugs
Locked Bearing Indicator	Locked Bearing
Motor Lead Quantity/Wire Size	3 @ 18 AWG
Motor Lead Termination	Flying Leads
Motor Standards	NEMA
Motor Type	0522M
Mounting Arrangement	F1
Number of Poles	4
Overall Length	13.03 IN
Power Factor	76
Product Family	General Purpose
Pulley End Bearing Type	Ball
Pulley Face Code	C-Face
Pulley Shaft Indicator	Standard
Rodent Screen	None
Service Factor	1.15
Shaft Diameter	0.875 IN
Shaft Ground Indicator	No Shaft Grounding
Shaft Rotation	Reversible
Shaft Slinger Indicator	No Slinger
Speed	1768 rpm
Speed Code	Single Speed
Starting Method	Direct on line
Thermal Device - Bearing	None
Thermal Device - Winding	None
Vibration Sensor Indicator	No Vibration Sensor
Winding Thermal 1	None
Winding Thermal 2	None

Nameplate

NP3441L									
CAT.NO.	CEM3584T-5								
SPEC.	05C052X559G1								
HP	1.5								
VOLTS	575								
AMP	1.71								
RPM	1768								
FRAME	145TC	**HZ**	60			**PH**	3		
SER.F.	1.15	**CODE**	L	**DES**	B	**CL**	F		
NEMA-NOM-EFF	86.5	**PF**	76						
RATING	40C AMB-CONT								
CC	010A								
DE	6205	**ODE**	6203						
ENCL	TEFC	**SN**							
VPWM INVERTER READY									
CT6-60H(10:1)VT3-60H(20:1									
	SFA 2								

AC Induction Motor Performance Data
Record # 82041
Typical performance - not guaranteed values

Winding: 05WGX559-R001	**Type:** 0522M	**Enclosure:** TEFC

Nameplate Data				**575 V, 60 Hz: Single Voltage Motor**	
Rated Output (HP)			1.5	**Full Load Torque**	4.46 LB-FT
Volts			575	**Start Configuration**	direct on line
Full Load Amps			1.71	**Breakdown Torque**	16.69 LB-FT
R.P.M.			1768	**Pull-up Torque**	9.8 LB-FT
Hz	60	**Phase**	3	**Locked-rotor Torque**	11.36 LB-FT
NEMA Design Code	B	**KVA Code**	L	**Starting Current**	14.18 A
Service Factor (S.F.)			1.15	**No-load Current**	1.05 A
NEMA Nom. Eff.	86.5	**Power Factor**	76	**Line-line Res. @ 25ºC**	22 Ω
Rating - Duty			40C AMB-CONT	**Temp. Rise @ Rated Load**	34°C
S.F. Amps				**Temp. Rise @ S.F. Load**	41°C
				Locked-rotor Power Factor	62
				Rotor inertia	0.159 lb-ft²

Load Characteristics 575 V, 60 Hz, 1.5 HP

% of Rated Load	**25**	**50**	**75**	**100**	**125**	**150**	**S.F.**
Power Factor	35	54	67	76	81	84	79
Efficiency	75.8	83.9	86.1	86.4	85.5	84.2	85.9
Speed	1791	1784	1776	1768	1758	1748	1762
Line amperes	1.1	1.24	1.45	1.72	2.03	2.38	1.91

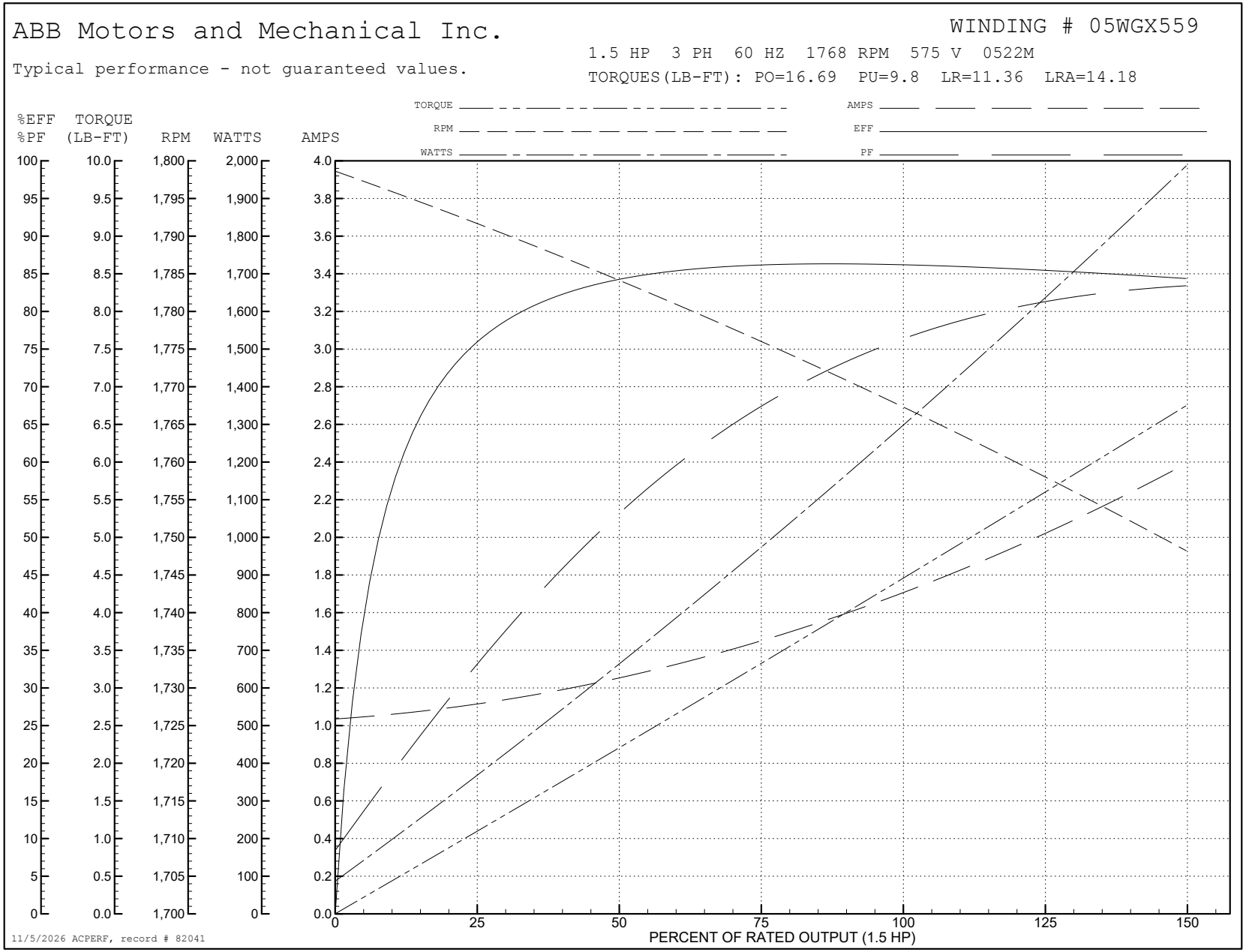
ABB Motors and Mechanical Inc.
WINDING # 05WGX559
1.5 HP 3 PH 60 HZ 1768 RPM 575 V 0522M
Typical performance - not guaranteed values.
TORQUES(LB-FT): PO=16.69 PU=9.8 LR=11.36 LRA=14.18
TORQUE
RPM
WATTS
AMPS
EFF
PF
%EFF %PF
TORQUE (LB-FT)
RPM
WATTS
AMPS
PERCENT OF RATED OUTPUT (1.5 HP)
11/5/2026 ACPERF, record # 82041

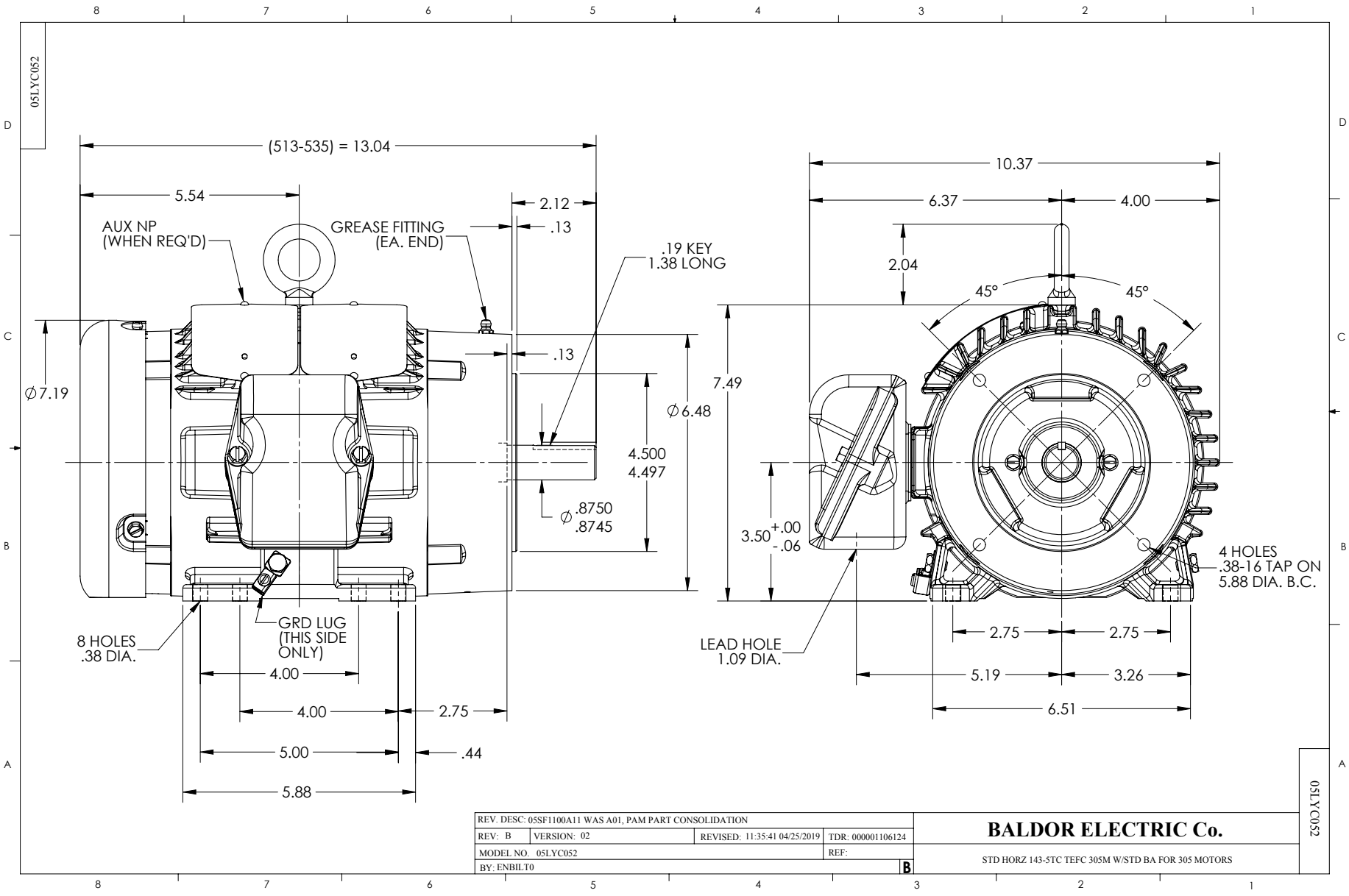
05LYC052
(513-535) = 13.04
5.54
2.12
.13
AUX NP
(WHEN REQ'D)
GREASE FITTING
(EA. END)
.19 KEY
1.38 LONG
∅7.19
.13
∅6.48
4.500
4.497
∅.8750
.8745
8 HOLES
.38 DIA.
GRD LUG
(THIS SIDE
ONLY)
4.00
4.00
2.75
5.00
.44
5.88
10.37
6.37
4.00
2.04
45°
45°
7.49
3.50 +.00 -.06
4 HOLES
.38-16 TAP ON
5.88 DIA. B.C.
LEAD HOLE
1.09 DIA.
2.75
2.75
5.19
3.26
6.51
REV. DESC: 05SF1100A11 WAS A01, PAM PART CONSOLIDATION
REV: B
VERSION: 02
REVISED: 11:35:41 04/25/2019
TDR: 000001106124
MODEL NO. 05LYC052
REF:
BY: ENBILT0
B
BALDOR ELECTRIC Co.
STD HORZ 143-5TC TEFC 305M W/STD BA FOR 305 MOTORS
05LYC052

CD0006

TYPICAL WYE–CONNECTED MOTOR

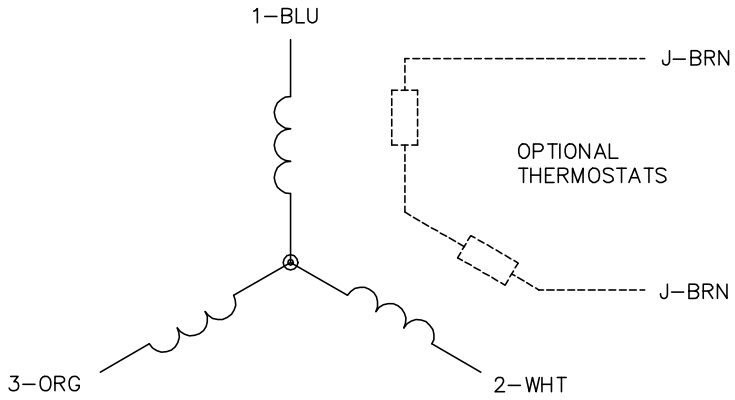

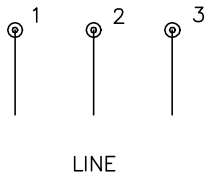

TYPICAL DELTA–CONNECTED MOTOR

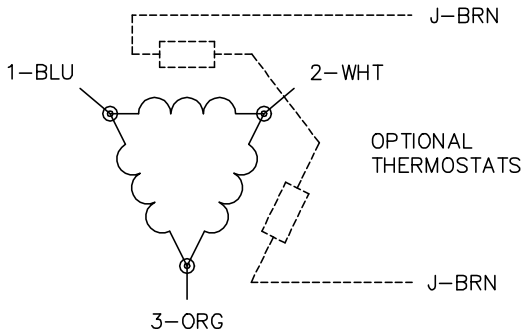

NOTES:

1. THREE LEAD MOTOR MAY BE EITHER WYE CONNECTED OR DELTA CONNECTED.
2. INTERCHANGE ANY TWO LINE LEADS TO REVERSE ROTATION.
3. OPTIONAL THERMOSTATS ARE PROVIDED WHEN SPECIFIED.
4. ACTUAL NUMBER OF INTERNAL PARALLEL CIRCUITS MAY VARY.
5. LEAD COLORS ARE OPTIONAL. LEADS MUST BE NUMBERED AS SHOWN.

CD0006

REV. DESC: ADD CLASS CONN00000007			BALDOR - RELIANCE®
REV. LTR: E	VERSION: 01	TDR: 000001099922	
FILE: \AAA\00005\141	REVISED: 10:24:49 02/19/2019	BY: ENBRIR0	3PH, SV, 3 LEADS, WYE OR DELTA CONNECTED
MTL: –			SH 1 of 1