ABB BALDOR RELIANCE

Customer information packet

CFSWDL3504

.5HP, 1750RPM, 1PH, 60HZ, 56C, 3520L, TEFC, F1
Class - None
Division - Not Applicable

Copyright © All product information within this document is subject to ABB Motors and Mechanical Inc. copyright © protection, unless otherwise noted.
11/5/2026 11:29:51 AM

Specifications

Enclosure	TEFC
Frame	56C
Frame Material	Stainless Steel
Frequency	60.00 Hz
Haz Area Class and Group	None
Haz Area Division	Not Applicable
Motor Letter Type	Cap Start, Induction Run
Output @ Frequency	.500 HP @ 60 HZ
Phase	1
Synchronous Speed @ Frequency	1800 RPM @ 60 HZ
Voltage @ Frequency	115.0 V @ 60 HZ
	230.0 V @ 60 HZ
Agency Approvals	WEEE
	C UR US
Ambient Temperature	40 °C
Auxiliary Box	NO AUXILLARY BOX
Auxiliary Box Lead Termination	None
Base Indicator	Rigid
Bearing Grease Type	Polyrex EM (-20F +300F)
Blower	None
Current @ Voltage	3.650 A @ 230.0 V
	7.300 A @ 115.0 V
Design Code	N
Drip Cover	No Drip Cover
Duty Rating	CONT
Efficiency @ 100% Load	66.0 %
Electrically Isolated Bearing	Not Electrically Isolated
Feedback Device	NO FEEDBACK
Front Shaft Indicator	None
Heater Indicator	No Heater
High Voltage Full Load Amps	3.7 a
Insulation Class	F

Part Detail

Revision	C
Type	AC
Mech. spec.	35E4732
Base	
Status	PRD/A
Elec. spec.	35WGG506
Layout	35LYE4732
Eff. date	12-20-2023
CD Diagram	CD0648
Poles	04
Leads	7#18
Proprietary	False
Created date	02-23-2023

Inverter Code	Not Inverter
KVA Code	M
Lifting Lugs	No Lifting Lugs
Locked Bearing Indicator	Locked Bearing
Motor Finish	UNPAINTED
Motor Lead Quantity/Wire Size	7 @ 18 AWG
Motor Lead Termination	Flying Leads
Motor Standards	NEMA
Motor Type	3520L
Mounting Arrangement	F1
Number of Poles	4
Overall Length	13.96 IN
Power Factor	65
Product Family	WD All SD Non-Encapsulated
Pulley End Bearing Type	Sealed Bearing
Pulley Face Code	C-Face
Pulley Shaft Indicator	Standard
Rodent Screen	None
RoHS Status	ROHS COMPLIANT
Service Factor	1.15
Shaft Diameter	0.625 IN
Shaft Ground Indicator	No Shaft Grounding
Shaft Rotation	Reversible
Shaft Slinger Indicator	No Slinger
Speed	1750 rpm
Speed Code	Single Speed
Starting Method	Direct on line
Thermal Device - Bearing	None
Thermal Device - Winding	None
Vibration Sensor Indicator	No Vibration Sensor
Winding Thermal 1	None
Winding Thermal 2	None

Nameplate

NP4427ALG30										
CAT #	CFSWDL3504			**WT**	37		**LBS**			
SPEC	35E4732G506G1			**ENCL**	TEFC					
SER #				**CC**			**IP**	69		
HP	.5						**NEMA NOM. EFF**			66
VOLTS	115/230									
AMPS	7.3/3.65						**PF**	65		
RATING	40C AMB-CONT									
RPM	1750									
FRAME	56C	**HZ**	60	**CODE**	M		**CLASS**			F
SER.F.	1.15	**SF AMP**	7.8/3.9				**PH**	1	**DES**	N
DE	6205		**ODE**	6205						
LUBRICATION	POLYREX EM									
									QR	
YR										

AC Induction Motor Performance Data
Record # 95486
Typical performance - not guaranteed values

Winding: 35WGG506-R001	**Type:** 3520L	**Enclosure:** TEFC

Nameplate Data				**115 V, 60 Hz: Low Voltage Connection**	
Rated Output (HP)			.5	**Full Load Torque**	1.5 LB-FT
Volts			115/230	**Start Configuration**	direct on line
Full Load Amps			7.3/3.65	**Breakdown Torque**	4.6 LB-FT
R.P.M.			1750	**Pull-up Torque**	3.4 LB-FT
Hz	60	**Phase**	1	**Locked-rotor Torque**	5.3 LB-FT
NEMA Design Code	N	**KVA Code**	M	**Starting Current**	46 A
Service Factor (S.F.)			1.15	**No-load Current**	5.77 A
NEMA Nom. Eff.	66	**Power Factor**	65	**Line-line Res. @ 25ºC**	1.09 Ω A Ph 1.61 Ω B Ph
Rating - Duty			40C AMB-CONT	**Temp. Rise @ Rated Load**	55°C
S.F. Amps			7.8/3.9	**Temp. Rise @ S.F. Load**	60°C
				Locked-rotor Power Factor	97.4
				Rotor inertia	0.145 lb-ft²

Load Characteristics 115 V, 60 Hz, 0.5 HP

% of Rated Load	**25**	**50**	**75**	**100**	**125**	**150**	**S.F.**
Power Factor	31	44	56	65	72	78	69
Efficiency	45	59.5	65.6	67.8	67.8	66	67.8
Speed	1785	1775	1763	1749	1732	1711	1739
Line amperes	5.82	6.11	6.63	7.32	8.26	9.43	7.88

ABB Motors and Mechanical Inc.

WINDING # 35WGG506

0.5 HP 1 PH 60 HZ 1750 RPM 115 V 3520L

Typical performance - not guaranteed values.

TORQUES(LB-FT): PO=4.6 PU=3.4 LR=5.3 LRA=46

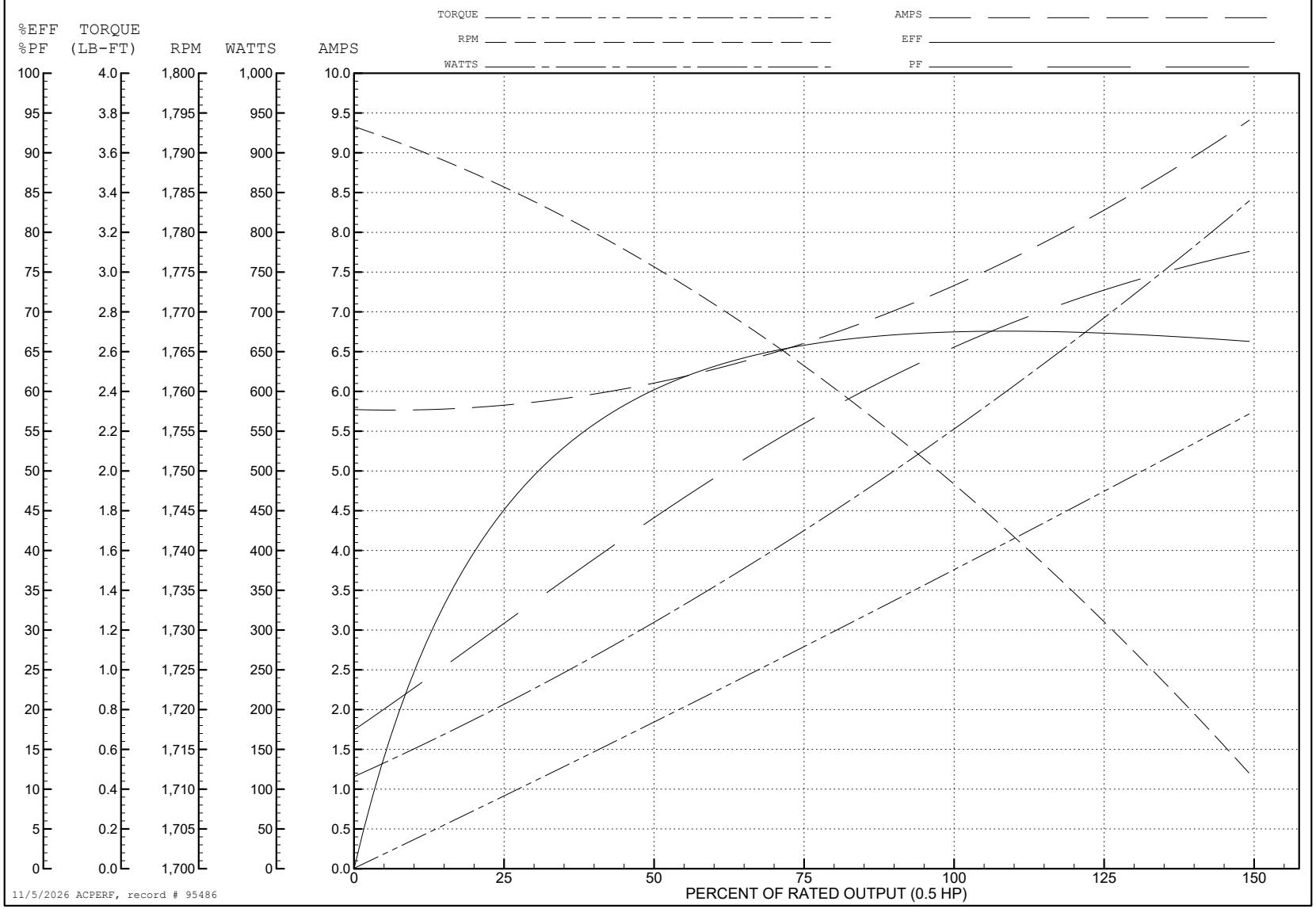

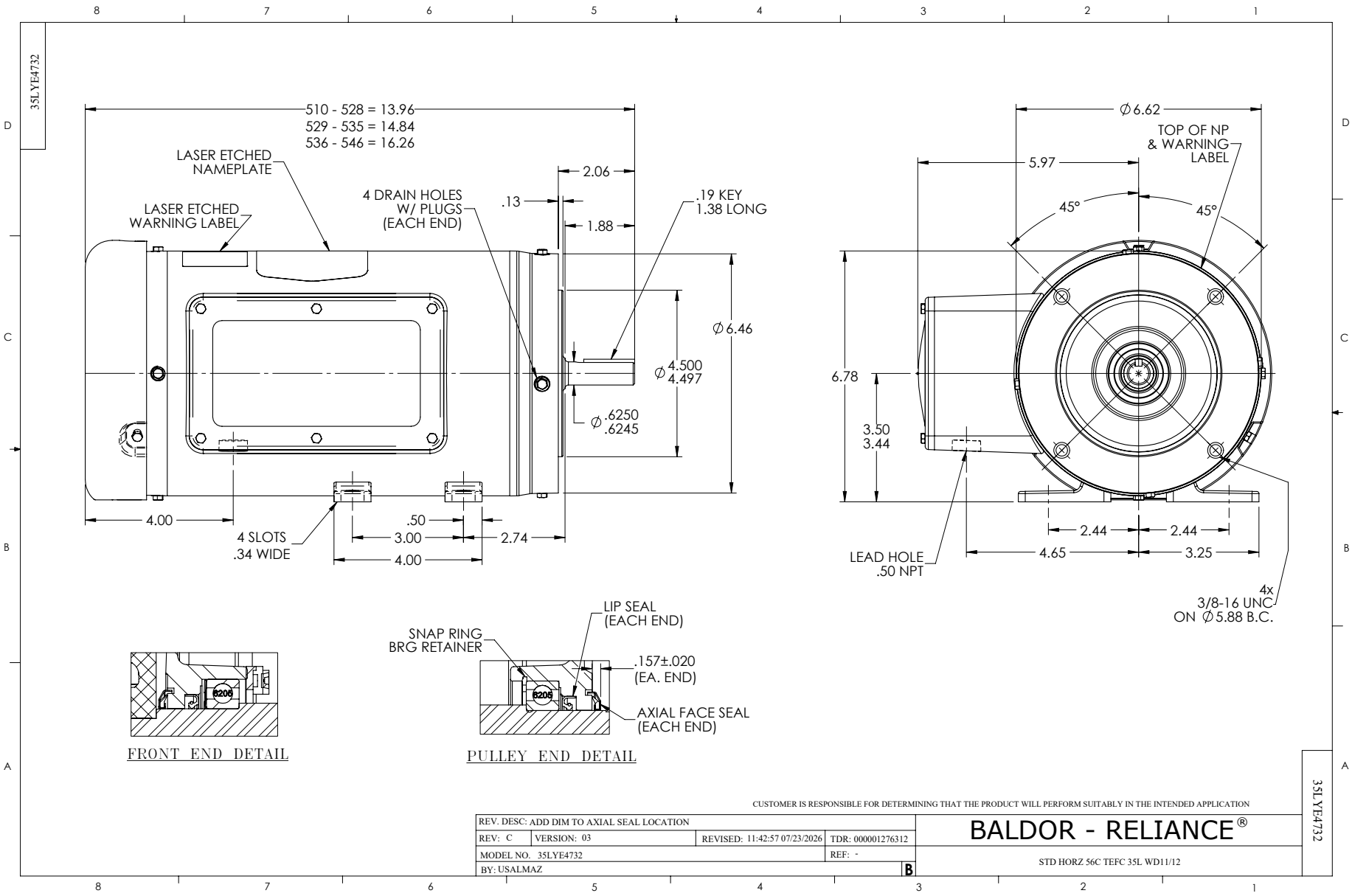
35LYE4732
510 - 528 = 13.96
529 - 535 = 14.84
536 - 546 = 16.26
LASER ETCHED NAMEPLATE
LASER ETCHED WARNING LABEL
4 DRAIN HOLES W/ PLUGS (EACH END)
2.06
.13
1.88
.19 KEY 1.38 LONG
Ø6.46
Ø4.500 4.497
Ø.6250 .6245
4.00
4 SLOTS .34 WIDE
.50
3.00
2.74
4.00
Ø6.62
TOP OF NP & WARNING LABEL
5.97
45°
45°
6.78
3.50 3.44
2.44
2.44
4.65
3.25
LEAD HOLE .50 NPT
4x 3/8-16 UNC ON Ø5.88 B.C.
SNAP RING BRG RETAINER
LIP SEAL (EACH END)
.157±.020 (EA. END)
AXIAL FACE SEAL (EACH END)
6206
6206
FRONT END DETAIL
PULLEY END DETAIL
CUSTOMER IS RESPONSIBLE FOR DETERMINING THAT THE PRODUCT WILL PERFORM SUITABLY IN THE INTENDED APPLICATION
REV. DESC: ADD DIM TO AXIAL SEAL LOCATION
REV: C
VERSION: 03
REVISED: 11:42:57 07/23/2026
TDR: 000001276312
MODEL NO. 35LYE4732
REF: -
BY: USALMAZ
B
BALDOR - RELIANCE®
STD HORZ 56C TEFC 35L WD11/12
35LYE4732

CD0648

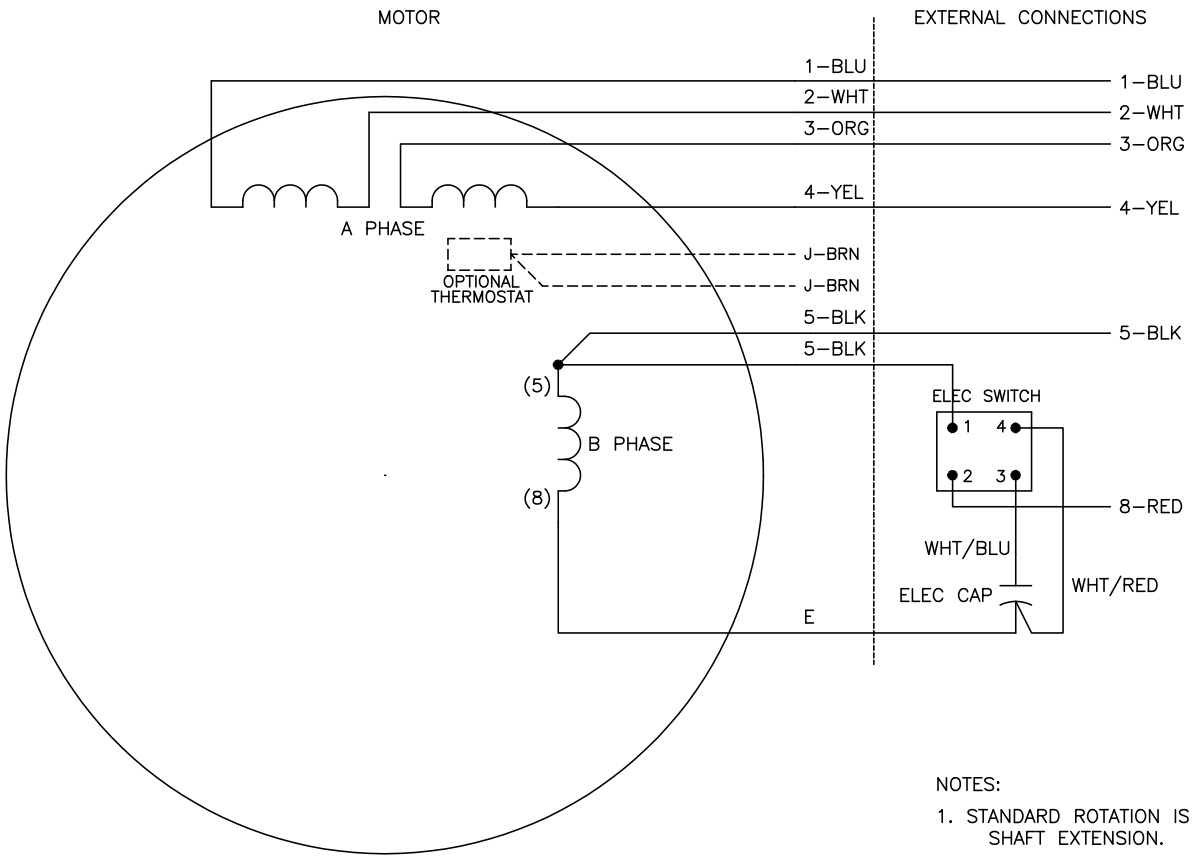

	LINE A	LINE B	JOIN
HIGH STD	1	4,5	2,3,8
HIGH OPP	1	4,8	2,3,5
LOW STD	1,3,8	2,4,5	–
LOW OPP	1,3,5	2,4,8	–

NOTES:

1. STANDARD ROTATION IS CCW FACING END OPPOSITE SHAFT EXTENSION.
2. OPTIONAL THERMOSTAT IS PROVIDED WHEN SPECIFIED.
3. MULTIPLE CAPACITORS ARE CONNECTED IN PARALLEL UNLESS OTHERWISE SPECIFIED.
4. USE STEARNS ELECTRONIC START SWITCH OR EQUIVALENT.
5. LEAD COLORS ARE OPTIONAL. LEADS MUST ALWAYS BE NUMBERED AS SHOWN.

CD0648

REV. DESC: ADD OPTIONAL LEAD COLORS			BALDOR ELECTRIC Co.
REV. LTR: B	BY: JLP	REVISED: 12/04/00 10:12	TDR: 0226347
CD0648		FILE: AAA00011416	REF: –
		MTL: –	TYPE L, DV, REV, 6 LEAD, SEPERATE CAP AND ELECTRONIC SWITCH