marathon®

General Purpose Motors

Model No: 324TTDBD6070
Catalog No: GT0073-P

General Purpose Motor, 40 & 30 HP, 3 Ph, 60 & 50 Hz, 230/460 & 190/380 V, 1800 RPM, 324T Frame, DP

©2026 Marathon, All Rights Reserved.

Product Information Packet: Model No: 324TTDBD6070, Catalog No: GT0073-P General Purpose Motor, 40 & 30 HP, 3 Ph, 60 & 50 Hz, 230/460 & 190/380 V, 1800 RPM, 324T Frame, DP

Nameplate Specifications

Phase	**3**	Output HP	**40 & 30 Hp**
Output KW	**30.0 & 22.4 kW**	Voltage	**230/460 & 190/380 V**
Speed	**1780 & 1482 r/min**	Synchronous RPM	**1800 & 1500 r/min**
Service Factor	**1.15 & 1.15**	Frame	**324T**
Enclosure	**Drip Proof**	Thermal Protection	**No Protection**
Efficiency	**94.1 & 93.6 %**	Ambient Temperature	**40 °C**
Frequency	**60 & 50 Hz**	Current	**95.5/47.5 & 87.5/43.5 A**
Power Factor	**83.5**	Duty	**Continuous**
Insulation Class	**F**	Design Code	**B**
KVA Code	**G**	Drive End Bearing Size	**6312**
Opp Drive End Bearing Size	**6311**	UL	**Recognized**
CSA	**Y**	CE	**Y**
IP Code	**22**	Number of Speeds	**1**

Technical Specifications

Electrical Type	**Squirrel Cage Inverter Rated**	Starting Method	**Part Wdg Start Low Volt Only & Wye Start Delta Run Or Inverter**
Poles	**4**	Rotation	**Reversible**
Resistance Main	**.209 O**	Mounting	**Rigid Base**
Motor Orientation	**Horizontal**	Drive End Bearing	**Ball**
Opp Drive End Bearing	**Ball**	Frame Material	**Rolled Steel**
Shaft Type	**T**	Shaft Diameter	**2.125 in**
Assembly/Box Mounting	**F1/F2 Capable**	Inverter Load	**Constant 4:1/Variable 10:1**

Drawings

Connection Drawing	**EE7308AA**	Outline Drawing	**SS620746-100**

This is an uncontrolled document once printed or downloaded and is subject to change without notice. Date Created: 16/10/2026

DASH NO.	B	C	D	E	2E	2F	2FF	BA	BS	MOUNTING	FRAME
100	14.85	28.38	8.00	6.25	12.50	10.50	12.00	5.25	11.90	F1 OR F2	324T
200		29.56							13.08		326T

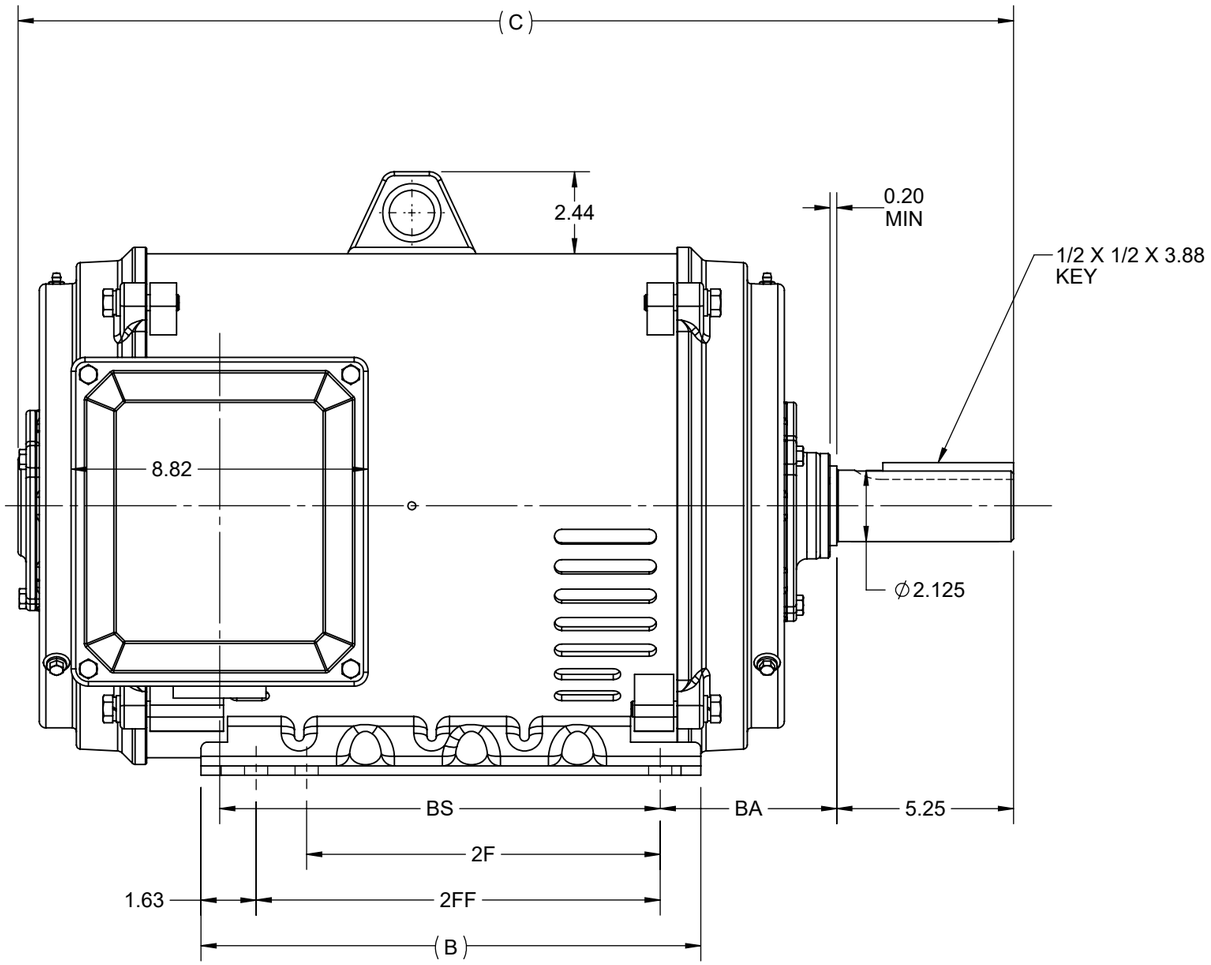

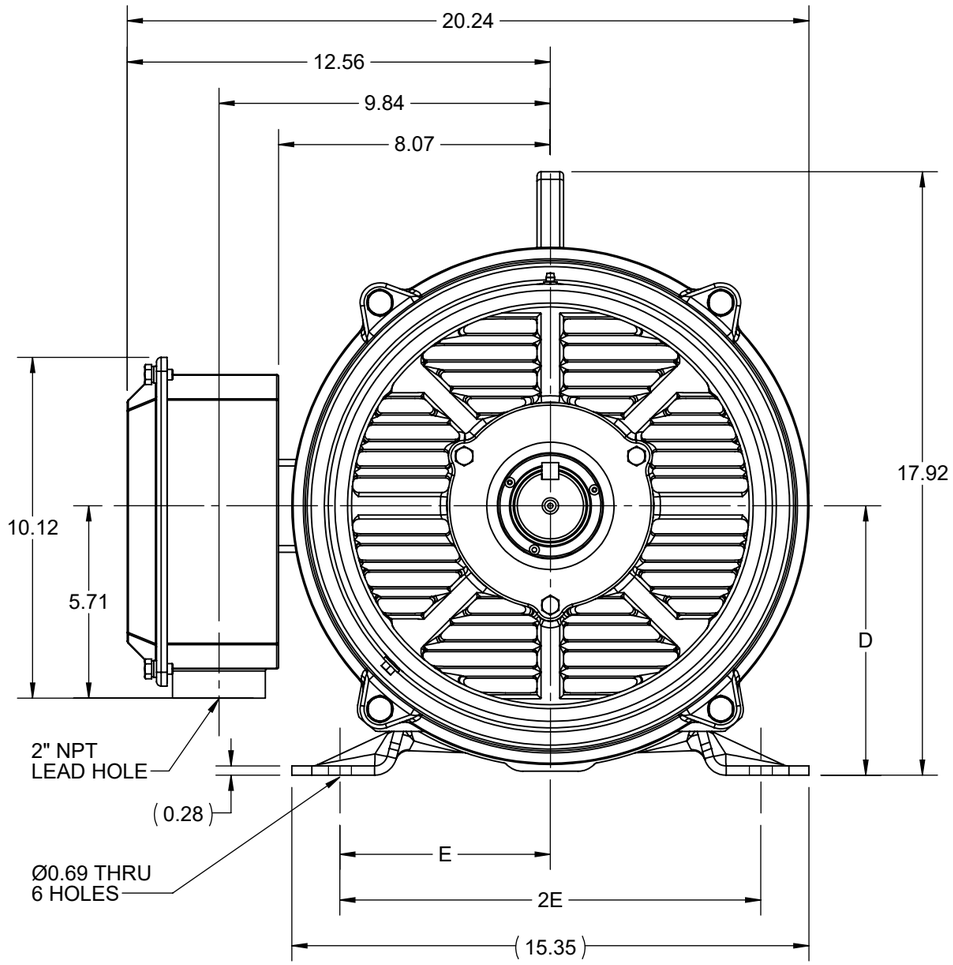

F2 VIEW

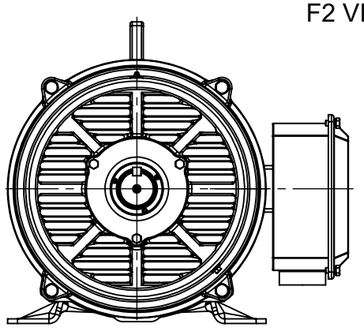

DRAWING REVISION	REVISION BY	REV DATE/© DATE
D	SB	07/23/2025
REQUEST NUMBER	APPROVED BY	DATE
CR-0023556	SBD	07/23/2025

REQUEST NUMBER DESCRIPTION
DRAWING TITLE BLOCK UPDATED

COPYRIGHT (PER REVISION DATE) MARATHON ELECTRIC, LLC. ALL RIGHTS RESERVED. PROPRIETARY AND CONFIDENTIAL INFORMATION - THIS DOCUMENT IS THE PROPERTY OF MARATHON ELECTRIC, LLC. ("OWNER") AND CONTAINS OWNER'S PROPRIETARY INFORMATION. ANY PERSON, CORPORATION OR OTHER FIRM RECEIVING IT IS DEEMED, BY RECEIVING IT, TO AGREE THAT IT, AND/OR ANY PART OF IT, SHALL NOT BE DISCLOSED TO ANY PERSON, CORPORATION OR OTHER ENTITY, DUPLICATED, AND/OR USED, EXCEPT AS EXPRESSLY APPROVED IN WRITING IN ADVANCE BY OWNER. THIS DOCUMENT SHALL BE RETURNED TO OWNER UPON REQUEST. IT MAY BE SUBJECT TO CERTAIN RESTRICTIONS UNDER APPLICABLE EXPORT CONTROL LAWS AND REGULATIONS.

PRIMARY DIMENSIONS ARE INCH
mm DIMENSIONS IN [BRACKETS]
ARE FOR REFERENCE ONLY

DRAWN BY	DESCRIPTION
XZ	OUTLINE
DATE	324/326T FR NEMA ODP RS
25/02/2016	
APPROVED BY	
DATE	
REFERENCE	MATERIAL / PROCESS/FINISH
THIRD ANGLE PROJECTION	SIZE B / DRAWING NUMBER SS620746 / SHEET 1 OF 1

marathon™

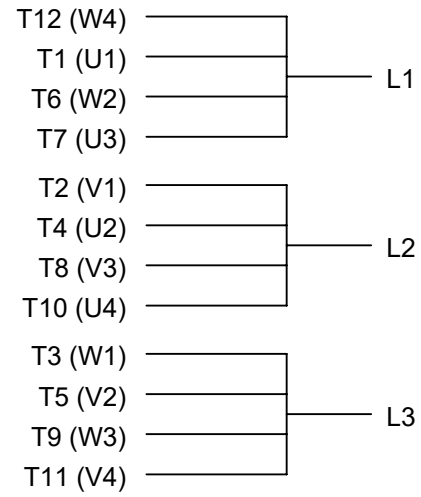

LOW VOLTAGE

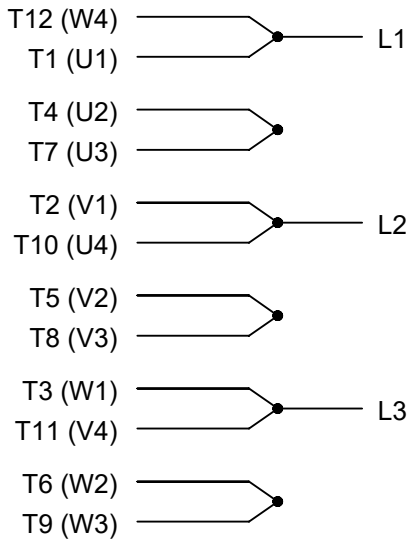

HIGH VOLTAGE

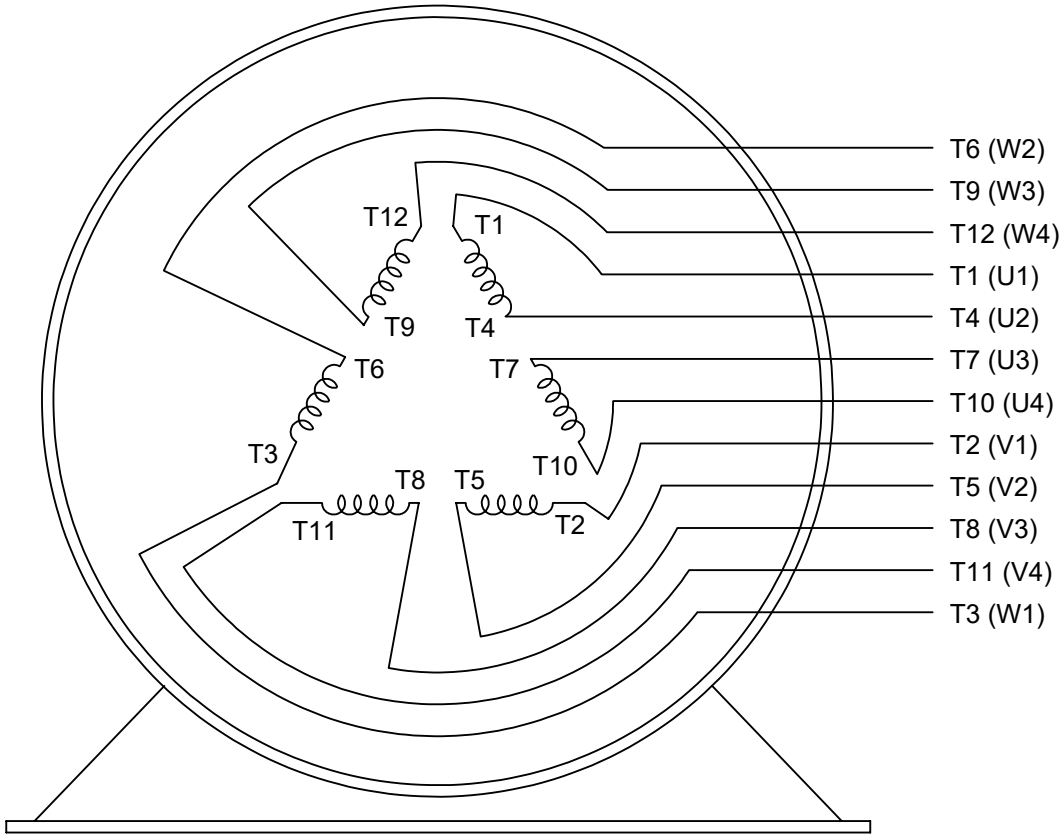

VIEW OF TERMINAL END

DRAWING REVISION: L	REVISION BY: SB	REV DATE/© DATE: 08/01/2025	PRIMARY DIMENSIONS ARE INCH mm DIMENSIONS IN [BRACKETS] ARE FOR REFERENCE ONLY	DRAWN BY: LZ	marathon™
REQUEST NUMBER: CR-0023654	APPROVED BY: SBD	DATE: 08/01/2025		DATE: 01-12-1994	
REQUEST NUMBER DESCRIPTION: DRAWING TITLE BLOCK UPDATED				APPROVED BY: GK	DESCRIPTION: CONN DIAGRAM-EXTERNAL 3Ø-2/1 DELTA-12 LEADS
				DATE: 01-14-1994	
				REFERENCE	MATERIAL / PROCESS/FINISH
				THIRD ANGLE PROJECTION	SIZE: A / DRAWING NUMBER: EE7308AA / SHEET: 1 OF 1

COPYRIGHT (PER REVISION DATE) MARATHON ELECTRIC, LLC. ALL RIGHTS RESERVED. PROPRIETARY AND CONFIDENTIAL INFORMATION - THIS DOCUMENT IS THE PROPERTY OF MARATHON ELECTRIC, LLC. ("OWNER") AND CONTAINS OWNER'S PROPRIETARY INFORMATION. ANY PERSON, CORPORATION OR OTHER FIRM RECEIVING IT IS DEEMED, BY RECEIVING IT, TO AGREE THAT IT, AND/OR ANY PART OF IT, SHALL NOT BE DISCLOSED TO ANY PERSON, CORPORATION OR OTHER ENTITY, DUPLICATED, AND/OR USED, EXCEPT AS EXPRESSLY APPROVED IN WRITING IN ADVANCE BY OWNER. THIS DOCUMENT SHALL BE RETURNED TO OWNER UPON REQUEST. IT MAY BE SUBJECT TO CERTAIN RESTRICTIONS UNDER APPLICABLE EXPORT CONTROL LAWS AND REGULATIONS.