HUBBELL Outdoor Lighting

DATE:	LOCATION:
TYPE:	PROJECT:
CATALOG #:	

RATIO Flood

MEDIUM AND LARGE

RATIO

RFL4

RFL5

RELATED PRODUCTS

RATIO Family | RFL1 | RFL2 | RFL3

BROCHURE
CATALOG PAGE
INSTALL INSTRUCTIONS

FEATURES

- Medium and Large LED flood with a variety of NEMA distributions for lighting applications such as area safety/security, accent, flag pole columns, or signs
- Part of the Ratio flood series, this luminaire was designed in cohesion with the site/area products to provide a sleek and timeless look
- Features a dense optical array, providing reduced pixelation and increased visual comfort without compromising performance
- Applications include safety/security, accent, flag pole, columns and signs

IP66

CONTROL TECHNOLOGY

SiteSync LIGHTING CONTROL

NX DISTRIBUTED™ INTELLIGENCE

SPECIFICATIONS

CONSTRUCTION

- Corrosion resistant, rugged die-cast aluminum housing with powder coatpaint finish
- High impact UV stabilized acrylic outer lens protects LEDs and allows for cleaning and debris removal
- Internal venting fins create optimal heat dissipation and allow all water to drain from the face of the luminaire
- Visor, louver and vandal Lens options
- Easy maintenance access to electrical components with removal of four screws from back of fixture housing
- Lens hardware is internal to the fixture allowing for uniform pressure on the gasket for an optimal water tight seal

OPTICS

- 176 or 360 midpower LEDs
- Stock Versions: 4000K and 5000K CCT
- Variety of NEMA distributions: - N (3x3), M (4x4), and W (6x6). Stock version Wide (6x6) only
- Entire optical aperture illuminates to create a larger luminous surface area resulting in a low glare appearance without sacrificing optical performance

CONTROLS

- Photo control, occupancy sensor and wireless available for complete on/off dimming control

CONTROLS (CONTINUED)

- 7-pin ANSI C136.41–2013 photocontrol receptacle option available for twist lock photocontrols or wireless control modules (control accessories sold separately)
- 0–10V dimming leads available for use with control devices (provided by others), must specify lead length
- 0–10V dimming driver standard, continuous dimming option to have leads pulled out for easy connection
- SiteSync™ wireless control system is available via 7-pin and can be ordered separately. See ordering information and details at: www.hubbelllighting.com/sitesync

INSTALLATION

- Interchangeable knuckle and trunnion mounting options
- Knuckle arm fitter option available for 2-⅜" OD tenon. 180 degrees of adjustability (with no options). 4 degree adjustable increments
- Trunnion option available for surface and crossarm mounting using (1) ¾" or (2) ½" size through bolts

ELECTRICAL

- 120–480V operation, 50/60Hz
- Driver IP66 and RoHS compliant driver
- Ambient operating temperature -40°C to 40°C. (265W configuration rated for 25°C)

ELECTRICAL (CONTINUED)

- 7-pin module can limit backwards rotation of the luminaire
- Drivers have 90% power factor and less than 20% THD
- LED drivers have output power over-voltage, over-current protection and short circuit protection with auto recovery
- 10kA surge protector optional

CERTIFICATIONS

- Fixture is IP66 rated
- Listed to UL1598 for use in wet locations
- DLC® (DesignLights Consortium Qualified, with some Premium Qualified configurations. Please refer to the DLC website for specific product qualifications at www.designlights.org

WARRANTY

- 5 year limited warranty
- See HLI Standard Warranty for additional information

KEY DATA	
Lumen Range	12,000–30,000
Wattage Range	124–266
Efficacy Range (LPW)	116–125
Reported Life (Hours)	L70>191,000
Weights lbs. (kg)	16.0–25.7 (7.2–11.66)

© 2019 Hubbell Outdoor Lighting, a division of Hubbell Lighting, Inc. Specifications subject to change without notice.
701 Millennium Blvd • Greenville, SC 29607 / Tel 864.678.1000 / Website www.hubbelloutdoor.com

HUBBELL Lighting

HUBBELL Outdoor Lighting

DATE: LOCATION:

TYPE: PROJECT:

CATALOG #:

RATIO Flood

MEDIUM AND LARGE

STOCK ORDERING INFORMATION

Catalog Number	Mounting	Distribution	Wattage	Voltage	CCT	Lumens	LPW	Weight lbs. (KG)	Finish
RFL4–120–5K–K	Knuckle	Wide	124	120–277V	5000K	14746	122	16.0 (7.26)	Bronze
RFL4–120–4K–K	Knuckle	Wide	124	120–277V	4000K	15119	125	16.0 (7.26)	Bronze
RFL4–120–5K–T	Trunnion	Wide	124	120–277V	5000K	14746	122	16.0 (7.26)	Bronze
RFL4–120–4K–T	Trunnion	Wide	124	120–277V	4000K	15119	125	16.0 (7.26)	Bronze
RFL5–265–5K–K	Knuckle	Wide	266	120–277V	5000K	29362	116	25.7 (11.66)	Bronze
RFL5–265–4K–K	Knuckle	Wide	266	120–277V	4000K	30106	119	25.7 (11.66)	Bronze
RFL5–265–5K–T	Trunnion	Wide	266	120–277V	5000K	29362	116	25.7 (11.66)	Bronze
RFL5–265–4K–T	Trunnion	Wide	266	120–277V	4000K	30106	119	25.7 (11.66)	Bronze
RFL–TRN–XX[1]	Trunnion Accessory Kit								

1 Specify finish color to match fixture

ORDERING GUIDE

Example: RFL4–176L-95–3K7–M–UNV–K–GYS

CATALOG # _____

Model	
RFL4	Ratio Flood Size 4
RFL5	Ratio Flood Size 5

# LEDs Wattage	
176L–95	176 LEDs–12000lm
176L–120	176 LEDs–15000lm
360L–130	360 LEDs–18000lm
360L–190	360 LEDs–25000lm
360L–265	360 LEDs–30000lm

CCT/CRI	
3K7	3000K, 70 CRI
4K7	4000K, 70 CRI
5K7	5000K, 70 CRI

Distribution	
N	Narrow, 2x2
M	Medium Flood, 4x4
W	Wide Flood, 6x6

Voltage	
UNV	Universal 120–277
120	120V
208	208V
240	240V
277	277V
347	347V
480	480V

Mounting	
K	Knuckle
T	Trunnion

Color	
GYS	Light gray smooth
DB	Dark bronze textured
BL	Black textured
GT	Graphite textured
PS	Platinum silver smooth
WH	White textured
CC	Custom color

Control Options	
PC	Button style photocontrol
CD	Continuous dimmable

Options	
SP	Surge Protector
F	Fusing

Control Options	
NX Standalone	
NXSP14F[1]	NX, PIR BT Occ. Sensor, Daylight Harvesting, up to 14' mounting height
NXSP30F[1]	NX, PIR BT Occ. Sensor, Daylight Harvesting, 14'–30' mounting height
NX Networked – Wireless	
NXSPW14F[1]	NX Wireless, PIR, BT Occupancy Sensor, Daylight Harvesting, up to 12' mounting height
NXSPW30F[1]	NX Wireless, PIR, BT Occupancy Sensor, Daylight Harvesting, 14'–30' mounting height
NXWE[1]	NX Wireless Enabled
Third-Party Control Options	
SCP-_F[1]	Programmable occupancy sensor
7PR[1,2]	7-Pin twist lock receptacle
7PR-SC[1,2]	7-Pin receptacle with shorting cap
7PR-MD-F[1,2]	Low voltage sensor for 7PR
7PR-TL[1,2]	7-Pin PCR with photo control

1 Option available with kunckle mounting
2 Limits backwards rotation based on module height

© 2019 Hubbell Outdoor Lighting, a division of Hubbell Lighting, Inc. Specifications subject to change without notice.
701 Millennium Blvd • Greenville, SC 29607 / Tel 864.678.1000 / Website www.hubbelloutdoor.com

HUBBELL Lighting

DATE: LOCATION:

TYPE: PROJECT:

CATALOG #:

RATIO Flood

MEDIUM AND LARGE

ACCESSORIES AND REPLACEMENT PARTS (ORDERED SEPARATELY)

	Catalog Number	Description
☐	RFL4–TV–XX[1]	Top Visor - RFL4
☐	RFL4–FL–XX[1]	Louver - RFL4
☐	RFL5–TV–XX[1]	Top Visor - RFL5
☐	RFL5–FL–XX[1]	Louver - RFL5

1 Specify finish color to match fixture, e.g. DB - Bronze

HUBBELL CONTROL SOLUTIONS ACCESSORIES

	Catalog Number	Description	HCS System
☐	NXOFM-1R1D-UNV	On-fixture Module (7-pin), On / Off / Dim, Daylight Sensor with HubbNET Radio and Bluetooth® Radio, 120-480VAC	NX Distributed IntelligenceTM
☐	WIR-RME-L	On-fixture Module (7-pin or 5-pin), On / Off / Dim, Daylight Sensor with wiSCAPE Radio, 110-480VAC	wiCSCAPE® Lighting Control

CONTROL ACCESSORIES

	Catalog Number	Description
☐	SW7PR	SiteSyncTM on fixture module via 7PR
☐	SWUSB	SiteSyncTM Software on USB
☐	SWTAB	SiteSyncTM Windows Tablet
☐	SWBRG	SiteSyncTM Wireless Bridge Node
☐	SWFC	SiteSyncTM Field Commission Serv
☐	SCPREMOTE	Order at least one per project location to program and control
☐	WIR–RME–L	wiSCAPETM external control node; use with 7PR
☐	NXOFM–1R1D–UNV	NX external control node; use with 7PR

PERFORMANCE DATA

					5K (5000K nominal, 70 CRI)			4K (4000K nominal, 70 CRI)			3K (3000K nominal, 70 CRI)		
Series	Nominal Watts	Dist. Type	NEMA	Field Angle H X V	Lumens	LPW[1]	Max Beam Candlepower	Lumens	LPW[1]	Max Beam Candlepower	Lumens	LPW[1]	Max Beam Candlepower
RFL4	95	N	2 x 2	20 x 20	12594	135	213259	12913	140	218652	12510	136	211825
		M	4 x 4	57 x 57	11894	128	28457	12196	131	29177	11816	127	82866
		W	6 x 6	105 x 105	12355	132	7037	12668	135	7215	12272	131	6990
	120	N	2 x 2	20 x 20	15031	127	254521	15411	130	260957	14931	126	252810
		M	4 x 4	57 x 57	14196	119	33912	14555	122	34770	14102	118	33684
		W	6 x 6	105 x 105	14746	122	8399	15119	125	8611	14647	121	8343
RFL5	130	N	2 x 2	20 x 20	19019	145	322063	19501	149	330208	18892	144	319898
		M	4 x 4	57 x 57	17963	136	44645	18419	140	45774	17843	135	44345
		W	6 x 6	105 x 105	18658	140	10628	19131	144	10897	18534	139	10557
	190	N	2 x 2	20 x 20	25278	134	428052	25918	139	438877	25110	133	425174
		M	4 x 4	57 x 57	23875	126	58831	24478	129	60319	23714	125	58436
		W	6 x 6	105 x 105	24799	129	14126	25427	133	14483	24634	128	14031
	265	N	2 x 2	20 x 20	29930	120	30685	30688	123	519638	29730	120	503414
		M	4 x 4	57 x 57	28268	113	68911	28983	119	70654	28078	112	68448
		W	6 x 6	105 x 105	29362	116	30106	30106	119	17148	29167	115	16612

1 Lumen values are from photometric tests performed in accordance with IESNA LM–79–08. Data is considered to be representative of the configurations shown. Actual performance may differ as a result of end-user environment and application.

© 2019 Hubbell Outdoor Lighting, a division of Hubbell Lighting, Inc. Specifications subject to change without notice.
701 Millennium Blvd • Greenville, SC 29607 / Tel 864.678.1000 / Website www.hubbelloutdoor.com

HUBBELL Outdoor Lighting

DATE: LOCATION:

TYPE: PROJECT:

CATALOG #:

RATIO Flood

MEDIUM AND LARGE

CONTROLS

NX Distributed Intelligence™ Lighting Controls:

Supports both indoor and outdoor applications in a variety of deployment options- wired, wireless, hybrid.
Integrates with and enables a wide array of luminaires including those with SpectraSync Color Tuning Technology.

NX DISTRIBUTED™ INTELLIGENCE

NX Integrated Controls Reference								
NX Option	Sensor	Networkable	Scheduling	Occupancy	Daylight Harvesting	0–10V Dimming	On/off Control	Bluetooth® App Programming
NX Standalone								
NXSP14F	NXSMP-LMO	No	Yes	Yes	Yes	Yes	Yes	Yes
NXSP30F	NXSMP-HMO	No	Yes	Yes	Yes	Yes	Yes	Yes
NX Networked – Wired								
NXSPW14F	NXSMP-LMO	Yes	Yes	Yes	Yes	Yes	Yes	Yes, Bluetooth App
NXSPW30F	NXSMP-HMO	Yes	Yes	Yes	Yes	Yes	Yes	Yes, Bluetooth App
NXWE	N/A	Yes	Yes	No	No	Yes	Yes	No. See footnote

SiteSync 7-Pin Module

- All of the SiteSync Features in a new form
- Available as an accessory for new construction or retrofit applications (with existing 7-Pin receptacle)
- Available on all products that have a 7-Pin receptacle

SiteSync™ LIGHTING CONTROL

ELECTRICAL DATA

# LEDS	Nominal Wattage	Input Voltage	Oper. Current (Amps)	System Power (W)
RFL4	95	120	0.78	93.5
		208	0.45	
		240	0.39	
		277	0.34	
	120	120	1.00	120.2
		208	0.58	
		240	0.50	
		277	0.43	
RFL5	130	120	1.11	132.6
		208	0.58	
		240	0.50	
		277	0.43	
	190	120	1.59	191
		208	0.92	
		240	0.80	
		277	0.69	
	265	120	2.10	252
		208	1.21	
		240	1.05	
		277	0.91	

© 2019 Hubbell Outdoor Lighting, a division of Hubbell Lighting, Inc. Specifications subject to change without notice.
701 Millennium Blvd • Greenville, SC 29607 / Tel 864.678.1000 / Website www.hubbelloutdoor.com

HUBBELL Lighting

HUBBELL Outdoor Lighting

DATE: LOCATION:

TYPE: PROJECT:

CATALOG #:

RATIO Flood

MEDIUM AND LARGE

PROJECTED LUMEN MAINTENANCE

Ambient Temperature	Operating Hours					
	0	25,000	50,000	TM–21–11 60,000[1]	100,000	Calculated L70 (Hours)
25°C / 77°C	1.00	0.96	0.94	0.91	0.83	> 191,000
40°C / 104°F	0.99	0.95	0.93	0.93	0.81	> 173,000

LUMINAIRE AMBIENT TEMPERATURE FACTOR (LATF)

Ambient Temperature		Lumen Multiplier
0° C	32° F	1.03
10° C	50° F	1.01
20° C	68° F	1.00
25° C	77° F	1.00
30° C	86° F	0.99
40° C	104° F	0.98
50° C	122° F	0.97

Use these factors to determine relative lumen output for average ambient temperatures from 0–50°C (32-122°F)

DIMENSIONS

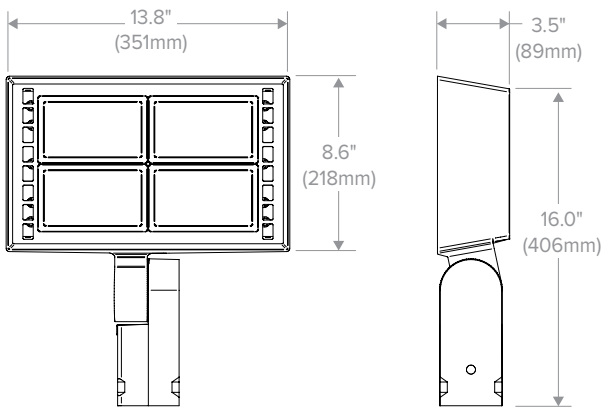

RFL4

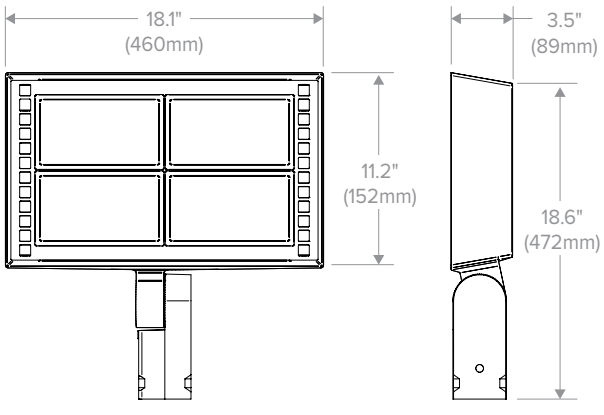

RFL 5

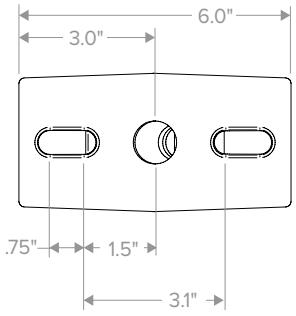

Trunnion Mount

RFL4 EPA(Front/Side)	RFL5 EPA(Front/Side)
1.24ft^2 / 0.43ft^2	2.00ft^2 / 0.50ft^2

© 2019 Hubbell Outdoor Lighting, a division of Hubbell Lighting, Inc. Specifications subject to change without notice.
701 Millennium Blvd • Greenville, SC 29607 / Tel 864.678.1000 / Website www.hubbelloutdoor.com

HUBBELL Lighting

DATE: LOCATION:

TYPE: PROJECT:

CATALOG #:

RATIO Flood

MEDIUM AND LARGE

ADDITIONAL INFORMATION

SHIPPING INFORMATION

Catalog Number	G.W (kg)/CTN	Carton Dimensions		
		Length Inch (cm)	Width Inch (cm)	Height Inch (cm)
RFL4	15lbs (6.8kg)	20.75 (52.7)	15.125 (38.4)	6.9375 (17.6)
RFL5	19lbs (8.6kg)	25 (63.5)	15.125 (38.4)	6.9375 (17.6)

ACCESSORIES

Visor

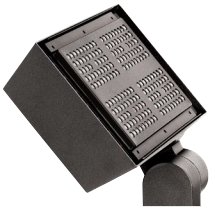

Louver

CONTROL IMAGES

Occupancy Sensor

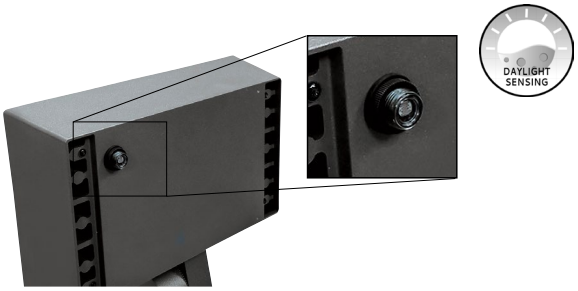

Photocontrol

Hubbell Controls Solutions' NX Distributed Intelligence™

7-Pin Receptacle

All product and company names, logos and product identifiers are trademarks ™ or registered trademarks ® of Hubbell Lighting, Inc. or their respective owners. Use of them does not necessarily imply any affiliation with or endorsement by such respective owners.

© 2019 Hubbell Outdoor Lighting, a division of Hubbell Lighting, Inc. Specifications subject to change without notice.
701 Millennium Blvd • Greenville, SC 29607 / Tel 864.678.1000 / Website www.hubbelloutdoor.com