# Trlobular Pan External Tooth SEMS

# THREAD ROLLING

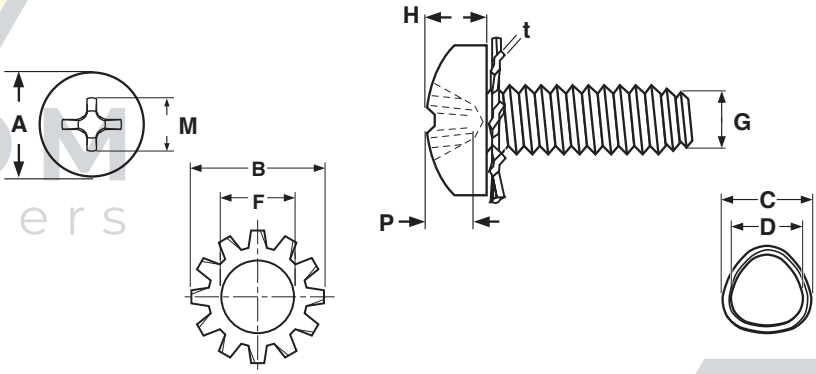


## TRILOBULAR THREAD ROLLING SCREW EXTERNAL TOOTH SEMS, PAN PHILLIPS

| Nominal Screw Size & Threads per Inch | A | | H | | B | | F | | t | | C | | D | | G | M | P | | Phillips Driver Size |
|---|---|---|---|---|---|---|---|---|---|---|---|---|---|---|---|---|---|---|---|
| | Head Diameter | | Head Height | | Washer Outside Diam | | Washer Inside Diam | | Washer Material Thickness | | Circumscribing Circle Diam | | Measurement Across Center | | Point Diam of Circumscribing Circle | Drive Diam. | Gauge Penetration | | |
| | Max | Min | Max | Min | Max | Min | Max | Min | Max | Min | Max | Min | Max | Min | Max | Ref | Max | Min | Min |
| 4-40 | .219 | .204 | .080 | .069 | .230 | .219 | .104 | .100 | .018 | .012 | .114 | .110 | .110 | .105 | .090 | .115 | .071 | .053 | 1 |
| 6-32 | .270 | .255 | .097 | .086 | .287 | .269 | .126 | .123 | .022 | .016 | .141 | .134 | .135 | .128 | .111 | .159 | .080 | .055 | 2 |
| 8-32 | .321 | .305 | .115 | .104 | .319 | .304 | - | - | .023 | .018 | .167 | .160 | .161 | .154 | .137 | .177 | .097 | .071 | 2 |
| 10-24 | .372 | .356 | .133 | .121 | .380 | .364 | - | - | .024 | .018 | .194 | .187 | .185 | .178 | .152 | .193 | .113 | .089 | 2 |
| 10-32 | .372 | .356 | .133 | .121 | .380 | .364 | - | - | .024 | .018 | .193 | .186 | .187 | .180 | .163 | .193 | .113 | .089 | 2 |
| | | | | | | | | | | | | | | | | | | | |
| Tolerance on Length | | | | | | | + 0, -0.03 | | | | | | | | | | | | |

| | | |
|---|---|---|
| **Description** | Trilobular thread rolling screw with a gently rounded top surface and a captive, free-spinning external tooth lockwasher manufactured as one assembly. As each lobe of the screw moves through the pilot hole in the nut material, it forms and work-hardens the nut thread metal, producing an uninterrupted grain flow. | |
| **Applications/ Advantages** | For drilled, punched or corred holes in all ductile metals and punch extruded metals. Eliminates chips, requires low drive torque and provides excellent resistance to vibrational loosening. The washer/screw assembly makes this a locking screw with the washer providing the locking action. Machine pre-assembly provides cost savings to the end user. | |
| **Material** | ***Screw*** | ***Washer*** |
| | 1022 or equivalent carbon steel | 1050 or equivalent spring steel |
| **Heat Treatment** | Screws shall be quenched in liquid and then tempered by reheating to 650°F minimum. | |
| **Case Hardness** | Rockwell C45 minimum | - |
| **Case Depth** | ***2-56 through 6-32 diameters:*** .002 - .007<br>***8-32 through 10-32 diameters:*** .004 - .009 | - |
| **Core Hardness (after tempering)** | Rockwell C28-38 | Rockwell C40 - 50 |
| **Plating** | See Appendix-A for information on the plating of trilobular thread rolling SEMS screws. | |