ABB BALDOR RELIANCE

Customer information packet

L3508T

.75HP, 1145RPM, 1PH, 60HZ, 143T, 3526LC, TEFC
Class - None
Division - Not Applicable

Copyright © All product information within this document is subject to ABB Motors and Mechanical Inc. copyright © protection, unless otherwise noted.
11/5/2026 4:07:56 PM

Specifications

Enclosure	TEFC
Frame	143T
Frame Material	Steel
Frequency	60.00 Hz
Haz Area Class and Group	None
Haz Area Division	Not Applicable
Motor Letter Type	Cap Start, Cap Run
Output @ Frequency	.750 HP @ 60 HZ
Phase	1
Synchronous Speed @ Frequency	1200 RPM @ 60 HZ
Voltage @ Frequency	115.0 V @ 60 HZ
	230.0 V @ 60 HZ
Agency Approvals	C UR US
Ambient Temperature	40 °C
Auxiliary Box	NO AUXILLARY BOX
Auxiliary Box Lead Termination	None
Base Indicator	Rigid
Bearing Grease Type	Polyrex EM (-20F +300F)
Blower	None
Current @ Voltage	4.200 A @ 230.0 V
	7.800 A @ 115.0 V
Design Code	L
Drip Cover	No Drip Cover
Duty Rating	CONT
Efficiency @ 100% Load	74.0 %
Electrically Isolated Bearing	Not Electrically Isolated
Feedback Device	NO FEEDBACK
Front Shaft Indicator	None
Heater Indicator	No Heater
High Voltage Full Load Amps	4.2 a
Insulation Class	F
Inverter Code	Not Inverter

Part Detail

Revision	F
Type	AC
Mech. spec.	35EE001
Base	
Status	PRD/A
Elec. spec.	35WGG246
Layout	35LYEE001
Eff. date	11-13-2025
CD Diagram	CD0055
Poles	06
Leads	6#18
Proprietary	False
Created date	08-01-2022

KVA Code	G
Lifting Lugs	No Lifting Lugs
Locked Bearing Indicator	No Locked Bearing
Motor Lead Quantity/Wire Size	6 @ 18 AWG
Motor Lead Termination	Flying Leads
Motor Standards	NEMA
Motor Type	3526LC
Mounting Arrangement	F1
Number of Poles	6
Overall Length	13.29 IN
Power Factor	82
Product Family	General Purpose
Pulley End Bearing Type	Ball
Pulley Face Code	Standard
Pulley Shaft Indicator	Standard
Rodent Screen	None
Service Factor	1.00
Shaft Diameter	0.875 IN
Shaft Ground Indicator	No Shaft Grounding
Shaft Rotation	Reversible
Shaft Slinger Indicator	No Slinger
Speed	1145 rpm
Speed Code	Single Speed
Starting Method	Direct on line
Thermal Device - Bearing	None
Thermal Device - Winding	None
Vibration Sensor Indicator	No Vibration Sensor
Winding Thermal 1	None
Winding Thermal 2	None

Nameplate

NP1256L								
CAT.NO.	L3508T							
SPEC.	35EE001G246							
HP	.75							
VOLTS	115/230							
AMP	7.8/4.2							
RPM	1145							
FRAME	143T	**HZ**	60			**PH**	1	
SER.F.	1.00	**CODE**	G	**DES**	L	**CLASS**	F	
NEMA-NOM-EFF	74	**PF**	82					
RATING	40C AMB-CONT							
CC								
DE	6205	**ODE**	6203					
ENCL	TEFC	**SN**						

Accessories

Part number	Description	Multiplier
35-8762	C FACE KIT	A8
35EP1506A01SP	D-FLANGE KIT	A8

AC Induction Motor Performance Data
Record # 91093
Preliminary Data Sheet

Winding: 35WGG246-R003	**Type:** 3526LC	**Enclosure:** TEFC

Nameplate Data				**115 V, 60 Hz: Low Voltage Connection**	
Rated Output (HP)			.75	**Full Load Torque**	3.4 LB-FT
Volts			115/230	**Start Configuration**	direct on line
Full Load Amps			7.8/4.2	**Breakdown Torque**	7.79 LB-FT
R.P.M.			1145	**Pull-up Torque**	4.49 LB-FT
Hz	60	**Phase**	1	**Locked-rotor Torque**	9.71 LB-FT
NEMA Design Code	L	**KVA Code**	G	**Starting Current**	46.2 A
Service Factor (S.F.)			1	**No-load Current**	4.55 A
NEMA Nom. Eff.	74	**Power Factor**	82	**Line-line Res. @ 25ºC**	1.62 Ω A Ph 2.35 Ω B Ph
Rating - Duty			40C AMB-CONT	**Temp. Rise @ Rated Load**	62°C
				Locked-rotor Power Factor	97.3
				Rotor inertia	0.188 lb-ft²

Load Characteristics 115 V, 60 Hz, 0.75 HP

% of Rated Load	**25**	**50**	**75**	**100**	**125**	**150**
Power Factor	58	73	82	86	89	89
Efficiency	45.9	64.1	72.2	74.7	73.4	67.7
Speed	1190	1182	1172	1160	1143	1115
Line amperes	4.64	5.24	6.19	7.54	9.29	12.04

ABB Motors and Mechanical Inc.

WINDING # 35WGG246

0.75 HP 1 PH 60 HZ 1145 RPM 115 V 3526LC

Typical performance - not guaranteed values.

TORQUES(LB-FT): PO=7.79 PU=4.49 LR=9.71 LRA=46.2

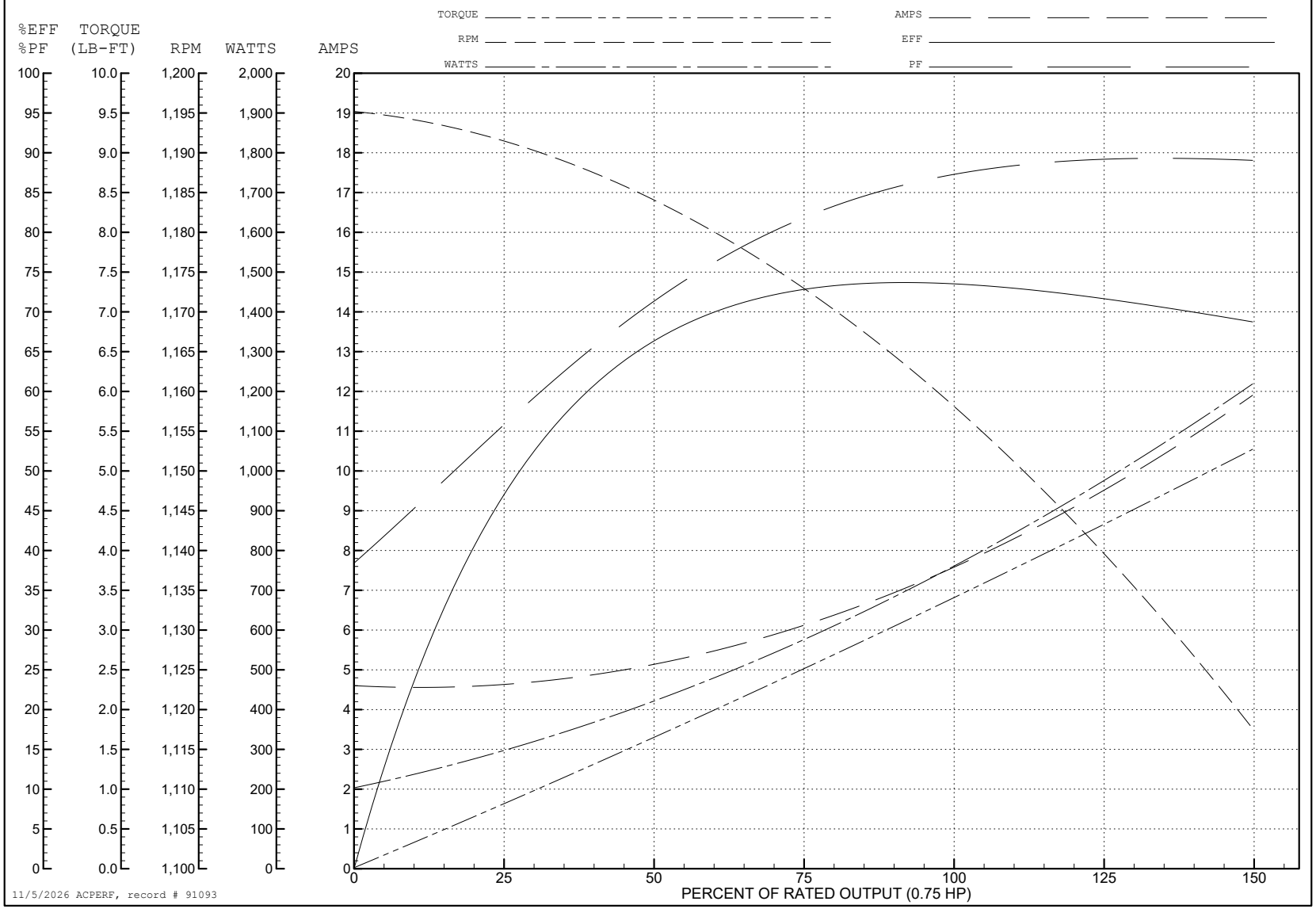

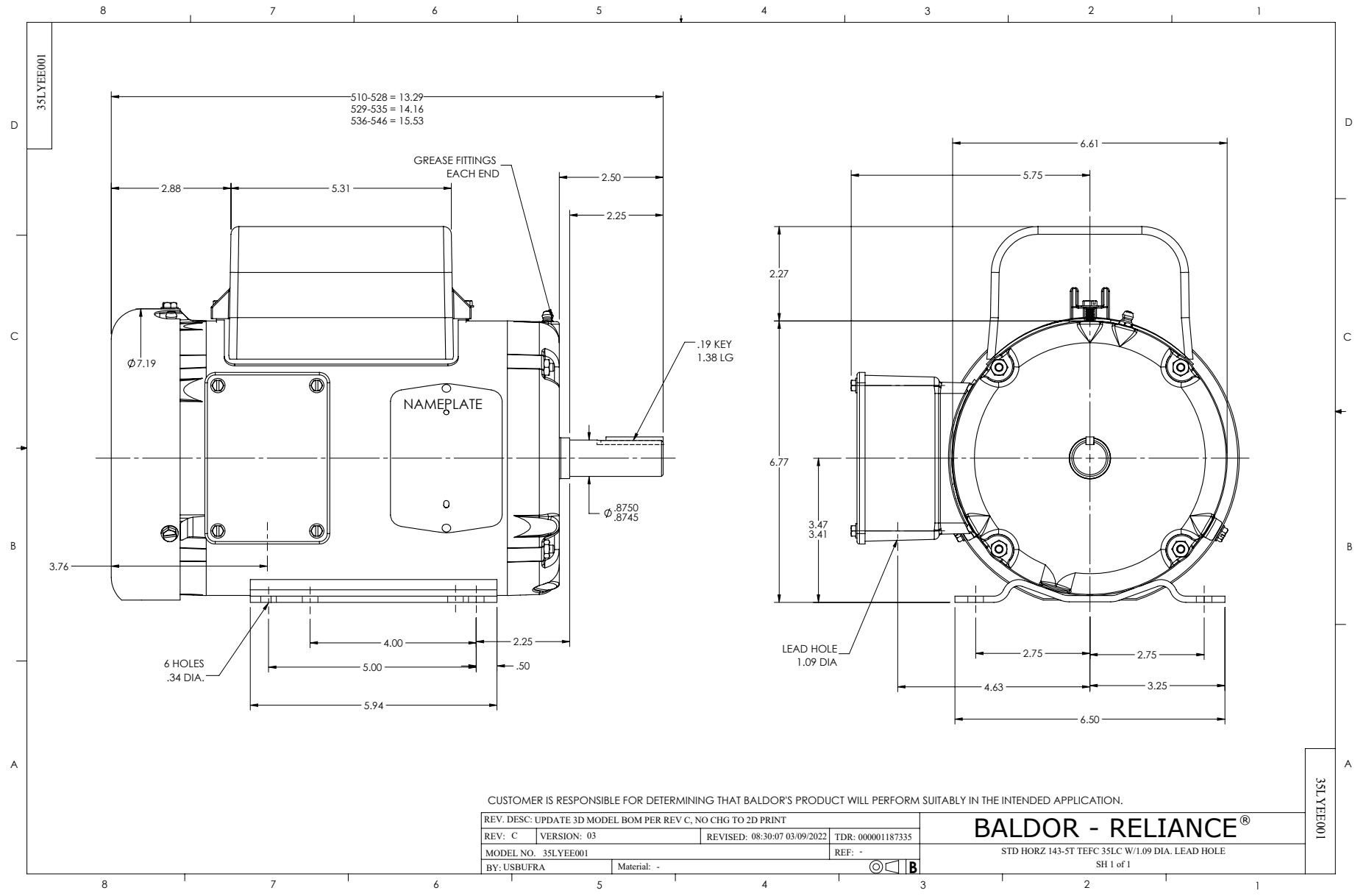
35LYEE001
510-528 = 13.29
529-535 = 14.16
536-546 = 15.53
GREASE FITTINGS EACH END
2.88
5.31
2.50
2.25
.19 KEY
1.38 LG
Ø7.19
NAMEPLATE
Ø .8750
Ø .8745
3.76
4.00
2.25
.50
5.00
5.94
6 HOLES
.34 DIA.
6.61
5.75
2.27
6.77
3.47
3.41
LEAD HOLE
1.09 DIA
2.75
2.75
4.63
3.25
6.50
CUSTOMER IS RESPONSIBLE FOR DETERMINING THAT BALDOR'S PRODUCT WILL PERFORM SUITABLY IN THE INTENDED APPLICATION.
REV. DESC: UPDATE 3D MODEL BOM PER REV C, NO CHG TO 2D PRINT
REV: C
VERSION: 03
REVISED: 08:30:07 03/09/2022
TDR: 000001187335
MODEL NO. 35LYEE001
REF: -
BY: USBUFRA
Material: -
B
BALDOR - RELIANCE®
STD HORZ 143-5T TEFC 35LC W/1.09 DIA. LEAD HOLE
SH 1 of 1
35LYEE001

CD0055

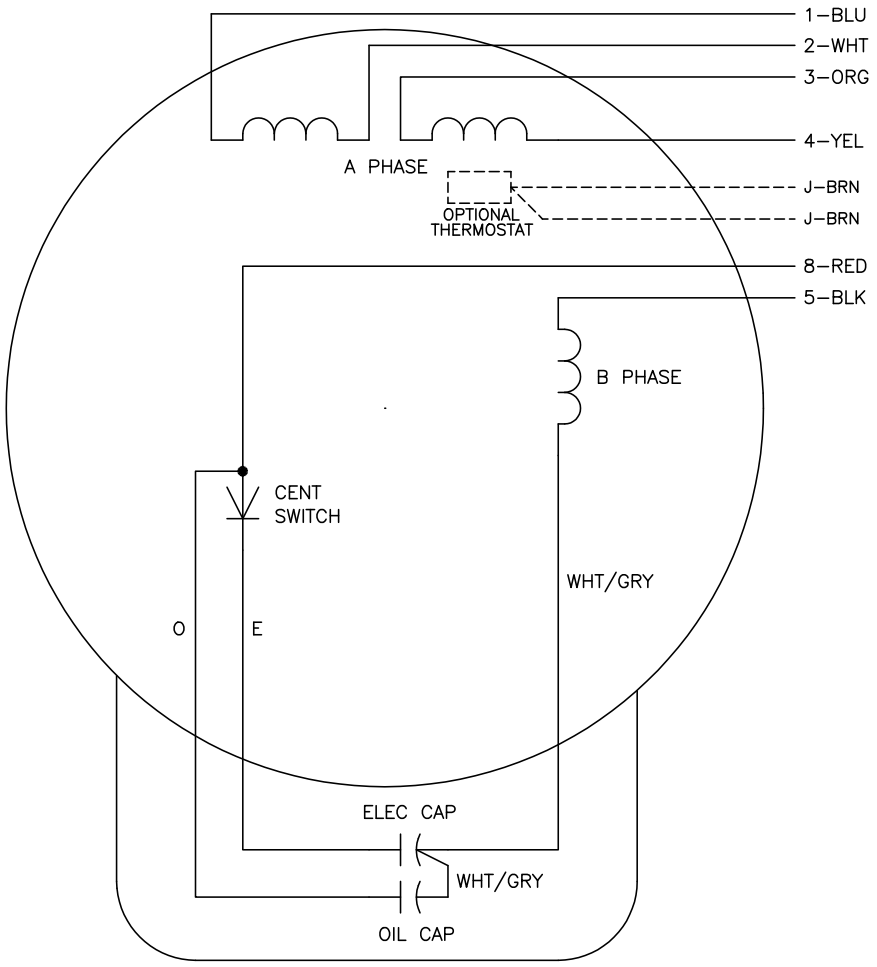

	LINE A	LINE B	JOIN
HIGH STD	1	4,5	2,3,8
HIGH OPP	1	4,8	2,3,5
LOW STD	1,3,8	2,4,5	–
LOW OPP	1,3,5	2,4,8	–

NOTES:

1. STANDARD ROTATION IS CCW FACING END OPPOSITE SHAFT EXTENSION.
2. OPTIONAL THERMOSTAT IS PROVIDED WHEN SPECIFIED.
3. MULTIPLE CAPACITORS ARE CONNECTED IN PARALLEL UNLESS OTHERWISE SPECIFIED.
4. LEAD COLORS ARE OPTIONAL. LEADS MUST ALWAYS BE NUMBERED AS SHOWN.

CD0055

REV. DESC: REVISE TO SHOW OPTIONAL COLORS			BALDOR ELECTRIC Co.
REV. LTR: D	BY: JLP	REVISED: 04/08/99 1:17	TDR: 0178636
CD0055		FILE: AAA00007414	MDL: –
		MTL: –	TYPE LC, DV, REV, 6 LEADS