DRAWING NO. SD079849

REV	DATE	DESCRIPTION	ECO	BY	C'H'K.
B	10/11/2010 5:00:00 PM	UPDATED TOOLING LIST ON SALES DRAWING.	22390	BT	MA

CATALOG NUMBER 11	STRANDED COPPER CONDUCTOR ACCOMMODATED			BOLT SIZE	METRIC BOLT SIZE	DIMENSIONS							
	CODE (AWG)	NAVY	METRIC SIZE (CLASS 2)			B	C	K DIA.	L	N	O.D.	T REF.	Z MIN.
YA29	250 kcmil	250	120mm² STR [14.5]	1/2	M12	1.62 [41]	1.11 [28]	.53 [13]	3.26 [83]	.53 [13]	.75 [19]	.16 [4]	.55 [14]
YA29N				1/2	M12	1.62 [41]	1.11 [28]	.56 [14]	3.45 [88]	.63 [16]	.75 [19]		.64 [16]
YA29TC38				3/8	--	1.62 [41]	1.10 [28]	.40 [10]	3.01 [76]	.41 [10]	.75 [19]		.42 [11]
YA30	300 kcmil	300	150mm² STR [16.2]	1/2	M12	2.00 [51]	1.20 [30]	.53 [13]	3.69 [94]	.53 [13]	.81 [21]		.55 [14]
YA30N				1/2	M12		1.20 [30]	.58 [14]	3.88 [99]	.63 [16]	.81 [21]	.16 [4]	.64 [16]
YA31	350 kcmil	350	-----	1/2	M12		1.29 [31]	.53 [13]	3.73 [95]	.53 [13]	.88 [22]	.18 [4]	.55 [14]
YA31N				1/2	M12	2.00 [51]	1.29 [31]	.56 [14]	3.92 [99]	.63 [16]	.88 [22]	.18 [4]	.64 [16]

CONNECTOR SIZE	TOLERANCES					
	B	C	K DIA.	L	N	O.D.
-8C THRU -25	±.06	+.04 -.02	±.02	±.09	±.03	±.01
-26 THRU -34	±.08	+.04 -.06	±.02	±.12	±.03	±.01
-35 AND UP	±.09	±.06	±.02	±.15	±.06	±.01

TOLERANCE BLOCK

INSTALLATION TOOLING (# OF CRIMPS)

CATALOG NO.	COLOR CODE	DIE INFORMATION		MECHANICAL				HYDRAULIC							DIELESS (# CRIMPS)		WIRE STRIP LENGTH
		DIE INDEX	TYPE	YIMRTC 6	OUR840	MD6 MD7	MD6--R2 MD7-34R	PATMD6 PAT600 Y500CT	Y34A Y34B Y34BH 8 5	Y35,Y39 Y750, PAT750 5	Y46, PAT46 4 5	Y45 3 5	Y48B	Y60BHU	MECHANICAL	HYDRAULIC	
YA29 YA29N YA29TC38	YELLOW	16	YELLOW DIE SET	-----	X29RT(8)	W29VT(4)	W29RT(4) W29VT(4)	W29VT(4)	A29R(2)	U29RT(2)	U29RT(2)	U29RT(2)	C29R(2)	L29RT(1)	MY29-3(2) MY29-11(2)	PAT81KFT(2) Y81KFT(2) PAT4PC834(2) Y4PC834(2) PAT644(1) Y644(1)	1-11/16"
			NEST INDENTOR	-----	-----	-----	-----	-----	B29D(2) A29D(2) Y34PR	U29D-1(2) Y34PR	U29D-1(2) Y34PR	U29D-1(2) Y34PR	C29D(1) Y48PR	-----			
YA30 YA30N	WHITE	17	WHITE DIE SET	-----	-----	-----	W30RT(4)	W30VT(4)	A2BAR(2)	U30RT(4) U28ART(4)	U30RT(4) U28ART(4)	U30RT(4) U28ART(4)	C30R(1) C28AR(1)	L30RT(1)		PAT81KFT(3) Y81KFT(3) PAT4PC834(3) Y4PC834(3) PAT644(1) Y644(1)	2-1/16"
		298	NEST INDENTOR	-----	-----	-----	-----	-----	B30D(2) A30D(2) Y34PR	U30D-1(2) Y34PR	U30D-1(2) Y34PR	U30D-1(2) Y34PR	C30D(2) Y48PR	-----			
YA31 YA31N	RED	18	RED DIE SET	-----	-----	-----	W31RT(4) W31VT(4)	W31VT(4)	-----	U31RT(4) U29ART(4)	U31RT(4) U29ART(4)	U31RT(4) U29ART(4)	C31R(1) C29AR(1)	L31RT(1) L29ART(1)			2-1/16"
		324	NEST INDENTOR	-----	-----	-----	-----	-----	B31D(2) A31D(2) Y34PR	U31D-1(2) Y34PR	U31D-1(2) Y34PR	U31D-1(2) Y34PR	C31D(1) Y48PR	-----			

NOTES:

1. MATERIAL : COPPER TUBING.
2. FINISH: ELECTRO-TIN PLATED.
3. CATALOG # PT6515 ADAPTOR IS REQUIRED TO USE "U" DIES IN Y45 SERIES TOOLS.
4. CATALOG # PUADP-1 ADAPTOR IS REQUIRED TO USE "U" DIES IN Y46 SERIES TOOLS.
5. Y35P3 INDENTOR ADAPTOR REQUIRED FOR Y34PR INDENTOR.
6. PERMANENT DIE IN TOOLING.
7. DIMENSIONS IN BRACKETS [ ] ARE IN MILLIMETERS ROUNDED OFF TO THE NEAREST MILLIMETER, UNLESS OTHERWISE NOTED, AND ARE FOR REFERENCE ONLY.
8. FOR USE BY CUSTOMERS THAT HAVE THIS HYPRESS™. NO NEW Y34A HYPRESSES™ ARE BEING PROCESSED. Y34A USES A--D NEST DIES ONLY.
9. CONNECTORS ARE UL LISTED; UNDRILLED VERSIONS ARE NOT UL LISTED.
10. CONNECTORS ARE CSA CERTIFIED; UNDRILLED VERSIONS ARE NOT CSA CERTIFIED.
11. FOR UNDRILLED VERSIONS ADD SUFFIX"U" TO END OF CATALOG NUMBER. FOR UNDRILLED VERSIONS, USE D MIN. = N MAX. + Z MIN.
12. "X", "W-RT", "W-VT", "U", & "L" DIE SETS ARE COLOR CODED. "A", "B", AND "C" DIES ARE NOT COLOR CODED. NESTS AND INDENTOR TYPE ARE NOT COLOR CODED.

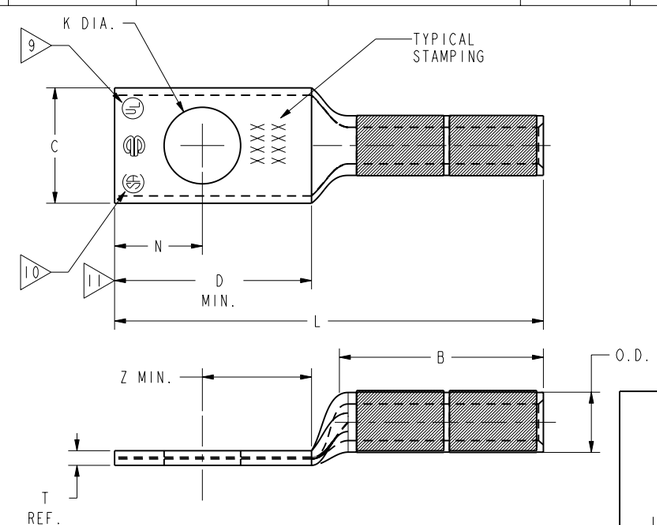

REFERENCE: SD17179, (YA-2, YA-4)
SE209241

TO ORDER BURNDY® PRODUCTS CALL

UNITED STATES
1-800-346-4175 (LONDONDERRY, NH)

CANADA:
1-800-361-6975 (QUEBEC)
1-800-387-6487 (ALL OTHER PROVINCES)

FOR PRODUCT INFO: http://www.burndy.com

HYLUG™

ITEM NO: N/A		
CAT. NO: YA-, YA-N, YA-TC- (TABLE)		
DRAWN BY: C.RACANO	6/15/77	
CHECKER: CAR	6/16/77	
DSN APPVL: LB	6/24/77	
MFG APPVL: N/A	--	
QC APPVL: C.ACKERMAN	9/9/94	
MKT APPVL: T.NELSON	9/07/94	
PROD FAM: --		
PROJECT #: --	SIZE	
DOCUMENT TYPE: Sales	D	
REL LEVEL: Released		

BURNDY

SCALE: NTS

DRAWING NO	REV
SD079849	B
SHEET 5 OF 10	

REV: PE0200