ABB BALDOR RELIANCE

Customer information packet

ECS101M0K3ED4

3KW, 1500RPM, 3PH, 50HZ, D112D, 3632B, TEFC, F1
Class - None
Division - Not Applicable

Copyright © All product information within this document is subject to ABB Motors and Mechanical Inc. copyright © protection, unless otherwise noted.
11/5/2026 11:51:43 AM

Specifications

Enclosure	TEFC
Frame	D112D
Frame Material	Steel
Frequency	50.00 Hz
Haz Area Class and Group	None
Haz Area Division	Not Applicable
Motor Letter Type	Brushless Wound Field PM Rotor
Output @ Frequency	3.000 KW @ 50 HZ
Phase	3
Synchronous Speed @ Frequency	1500 RPM @ 50 HZ
Voltage @ Frequency	190.0 V @ 50 HZ
	380.0 V @ 50 HZ
Agency Approvals	CE
	CULUS
	WEEE
Ambient Temperature	40 °C
Auxiliary Box	NO AUXILLARY BOX
Auxiliary Box Lead Termination	None
Base Indicator	No Mounting
Bearing Grease Type	Polyrex EM (-20F +300F)
Blower	None
Constant Torque Speed Range	5
Current @ Voltage	10.600 A @ 190.0 V
	5.300 A @ 380.0 V
Design Code	B
Drip Cover	No Drip Cover
Duty Rating	S1
Efficiency @ 100% Load	92.4 %
Electrically Isolated Bearing	Not Electrically Isolated
Feedback Device	NO FEEDBACK
Frame Prefix	D
Heater Indicator	No Heater

Part Detail

Revision	H
Type	AC
Mech. spec.	
Base	
Status	PRD/A
Elec. spec.	36WGA0020
Layout	36LY-000-293
Eff. date	02-12-2026
CD Diagram	CD0005A25
Poles	04
Leads	9#12
Proprietary	False
Created date	10-13-2022

High Voltage Full Load Amps	5.3 a
Insulation Class	F
Inverter Code	Inverter Duty
Lifting Lugs	Standard Lifting Lugs
Locked Bearing Indicator	No Locked Bearing
Motor Lead Termination	Flying Leads
Motor Standards	IEC
Motor Type	3632B
Mounting Arrangement	F1
Number of Poles	4
Overall Length	17.91 IN
Power Factor	97
Product Family	General Purpose
Pulley Face Code	D-Flange
Rodent Screen	None
Service Factor	1.00
Shaft Diameter	1.103 IN
Shaft Ground Indicator	Shaft Grounding
Shaft Rotation	Reversible
Speed	1500 rpm
Speed Code	Single Speed
Starting Method	Direct on line
Thermal Device - Bearing	None
Thermal Device - Winding	None
Vibration Sensor Indicator	No Vibration Sensor
Winding Thermal 1	None
Winding Thermal 2	None

Nameplate

NP3968B01A01									
CAT.NO.	ECS101M0K3ED4								
SPEC.	36-0000-3635				**YR**				
FRAME	D112D		**IP**	55	**WT.**	45			
KW	3	**HZ**	50		**PH**	3	**DUTY-IPM**	S1	
INS CL	F		**CLASS RISE**	B		**AMB-C**	40		
EFF. CL	IE5	**EFF**	92.4		**COS0**	97			
VOLTS	190/380		**FLA**	10.6/5.3					
1/MIN	1500			**1/MIN MAX**	3000				
BEMF (V)	105/210			**RS (OHMS)**	0.82/3.30				
LD (MH)	13.5/54.0				**LQ (MH)**	47.8/191.0			
VPWM	**CP =**	50		**TO**	100				
CT	5	**TO**	50	**VT**	1	**TO**	50		
MATCHED INV									
DE	6206		**ODE**	6205					
SERIAL #									

Volts	380	Max RPM	3000	Conn Diag.	CD0006B03	Leads	3
Amps	5.3	Max Amps		Cs Diagram	CS1126	BEMF	210
KW	3	VFD#	ECIN4A5P8			LD	54
RPM	1500	S.F.	1.00			LQ	191
Phase/Hz	3/50	Rating	40C AMB-S1			Rs	3.0984 Meas. L-L

60034-2-3 Motor Performance at Standardized Operating Points

	RPM	% Speed	LB-FT	% Torque	KW	Efficiency	Loss (% FL)	Watts Loss (W)
P1	1336	90%	14.1	100%	3.6	92.9	6.79%	204
P2	750	50%	14.1	100%	2.0	90.1	5.49%	165
P3	380	25%	14.1	100%	1.0	83.9	4.85%	146
P4	1350	90%	7.0	50%	1.8	93.3	3.26%	98
P5	750	50%	7.0	50%	1.0	91.3	2.40%	72
P6	750	50%	3.5	25%	0.5	91.2	1.22%	36
P7	378	25%	3.5	25%	0.3	87.7	0.88%	27

61800-9-2 PDS Performance at Reference Operating Points

	RPM	% Speed	LB-FT	% Torque	KW	System Efficiency	Loss (% FL)	Watts Loss (W)
P1	1508	100%	14.1	100%	4.0	90.2	10.89%	327
P2	750	50%	14.1	100%	2.0	86.8	7.63%	229
P3	255	17%	14.1	100%	0.7	72.0	6.59%	198
P4	1494	100%	7.0	50%	2.0	91.2	4.79%	144
P5	750	50%	7.0	50%	1.0	86.8	3.79%	114
P6	255	17%	7.0	50%	0.3	73.2	3.11%	93
P7	750	50%	3.5	25%	0.5	84.8	2.24%	67
P8	255	17%	3.5	25%	0.2	70.6	1.77%	53

Points not taken in certified order.

BALDOR • RELIANCE	DR By: R & D CK By: USTOSAN APP By: USJAROB1 Date: 01/09/2025	**AC MOTOR PERFORMANCE CURVES**	**36WGA0022** 36-0000-3639 *Test - 111783*

Volts	380	Max RPM	3000	Conn Diag.	CD0006B03	Leads	3
Amps	5.3	Max Amps		Cs Diagram	CS1126	BEMF	210
KW	3	VFD #	ECIN4A5P8			LD	54
RPM	1500	S.F.	1.00			LQ	191
Phase/Hz	3/50	Rating	40C AMB-S1			Rs	3.0984 Meas L-L

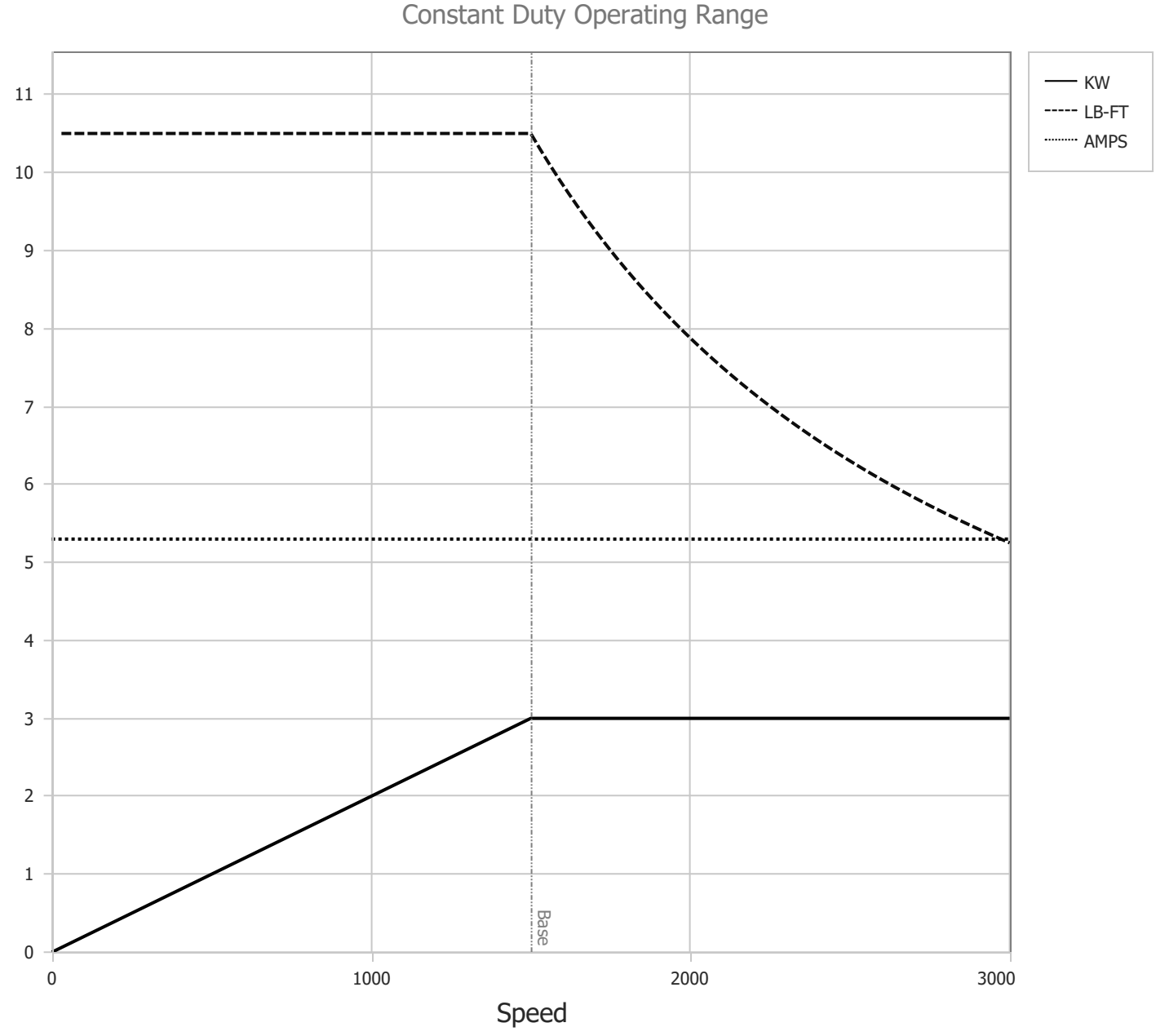

BALDOR • RELIANCE	DR By: R & D CK By: USTOSAN APP By: USJAROB1 Date: 01/09/2025	**AC MOTOR PERFORMANCE CURVES**	**36WGA0022** 36-0000-3639 *Test - 111783*

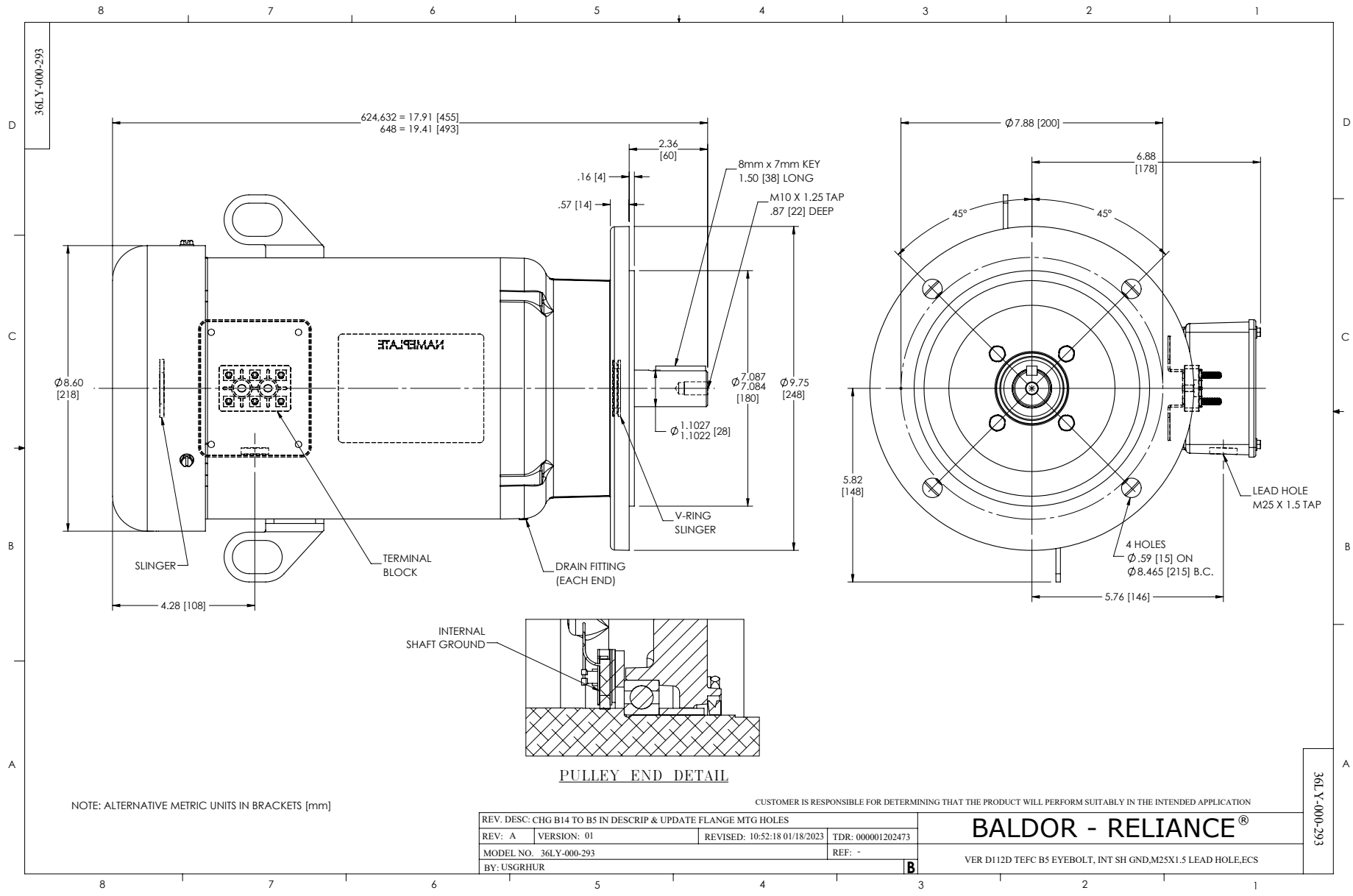
36LY-000-293
624,632 = 17.91 [455]
648 = 19.41 [493]
2.36
[60]
.16 [4]
.57 [14]
8mm x 7mm KEY
1.50 [38] LONG
M10 X 1.25 TAP
.87 [22] DEEP
Ø8.60
[218]
Ø7.087
7.084
[180]
Ø9.75
[248]
Ø 1.1027
1.1022 [28]
V-RING
SLINGER
SLINGER
TERMINAL
BLOCK
DRAIN FITTING
(EACH END)
4.28 [108]
Ø7.88 [200]
6.88
[178]
45°
45°
5.82
[148]
LEAD HOLE
M25 X 1.5 TAP
4 HOLES
Ø.59 [15] ON
Ø8.465 [215] B.C.
5.76 [146]
INTERNAL
SHAFT GROUND
PULLEY END DETAIL
NOTE: ALTERNATIVE METRIC UNITS IN BRACKETS [mm]
CUSTOMER IS RESPONSIBLE FOR DETERMINING THAT THE PRODUCT WILL PERFORM SUITABLY IN THE INTENDED APPLICATION
REV. DESC: CHG B14 TO B5 IN DESCRIP & UPDATE FLANGE MTG HOLES
REV: A
VERSION: 01
REVISED: 10:52:18 01/18/2023
TDR: 000001202473
MODEL NO. 36LY-000-293
REF: -
BY: USGRHUR
B
BALDOR - RELIANCE®
VER D112D TEFC B5 EYEBOLT, INT SH GND,M25X1.5 LEAD HOLE,ECS
36LY-000-293

CD0005A25

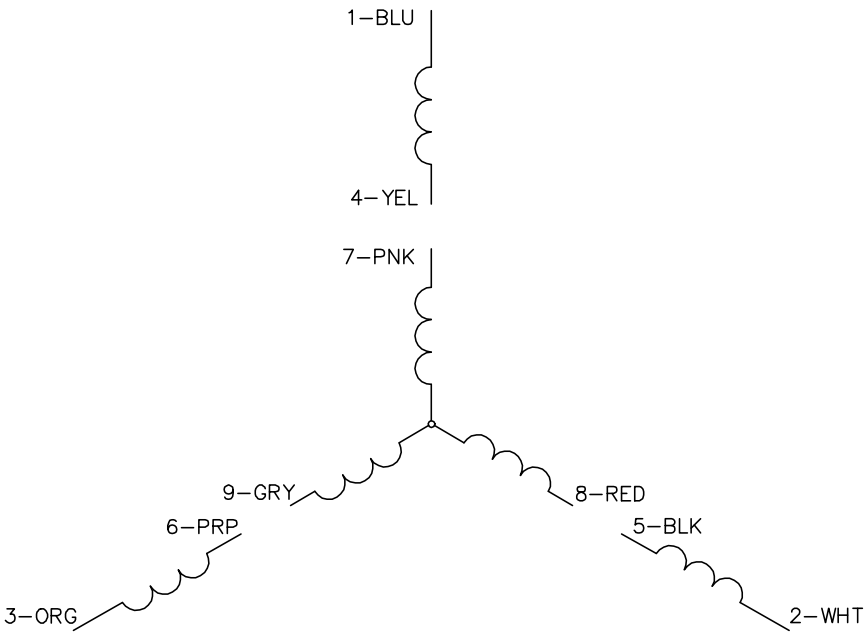

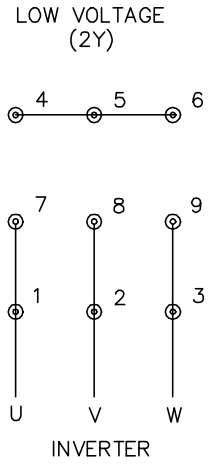

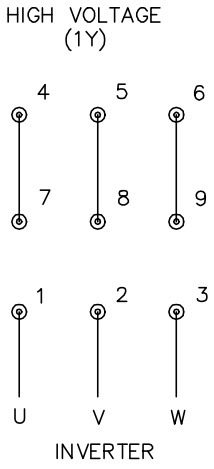

NOTES:

1. INTERCHANGE ANY TWO LINE LEADS TO REVERSE ROTATION.
2. ACTUAL NUMBER OF INTERNAL PARALLEL CIRCUITS MAY BE A MULTIPLE OF THOSE SHOWN ABOVE.
3. LEAD COLORS ARE OPTIONAL. LEADS MUST ALWAYS BE NUMBERED AS SHOWN.

CD0005A25

REV. DESC: NEW		
REV. LTR: –	VERSION: 00	TDR: 000001135746
FILE: \AAA\00253\082	REVISED: 01:10:57 03/30/2020	BY: ENMARSO
MTL: –		

BALDOR - RELIANCE®

3PH, DV, 9 LEADS, ECS

SH 1 of 1

SP0032

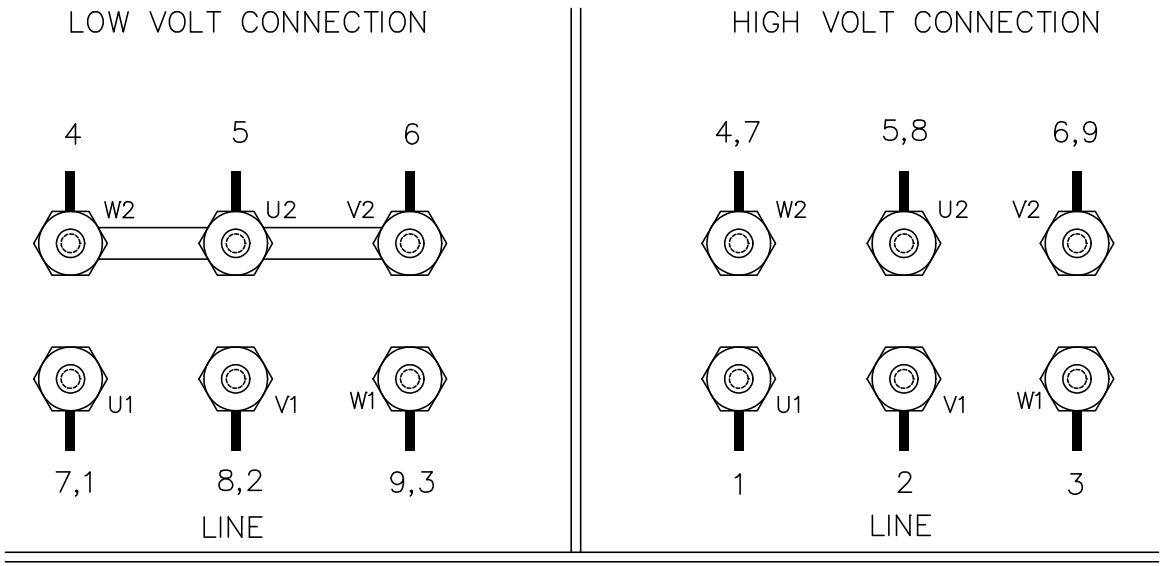

TO REVERSE ROTATION
INTERCHANGE ANY TWO
LINE LEADS.

MATL:				BALDOR ELECTRIC Co.
REV: A	ADD CONN LABEL REF TO DESC			
SP0032	SCALE: –	BY: JLP	REVISED: 12/17/96	THREE PHASE, DUAL VOLTAGE, TERMINAL BLOCK, CD0005/LC0005C01
	FILE: AAA00029378		TDR: 0111436	

SP0032