ABB BALDOR RELIANCE

Customer information packet

EFM2334T

20HP, 1770RPM, 3PH, 60HZ, 256T, 0960M, TEFC, F2
Class - None
Division - Not Applicable

Copyright © All product information within this document is subject to ABB Motors and Mechanical Inc. copyright © protection, unless otherwise noted.
11/5/2026 5:36:40 PM

Specifications

Enclosure	TEFC
Frame	256T
Frame Material	Iron
Frequency	60.00 Hz
Haz Area Class and Group	None
Haz Area Division	Not Applicable
Motor Letter Type	Three Phase
Output @ Frequency	20.000 HP @ 60 HZ
Phase	3
Synchronous Speed @ Frequency	1800 RPM @ 60 HZ
Voltage @ Frequency	460.0 V @ 60 HZ
	230.0 V @ 60 HZ
Agency Approvals	CURUSEEV
	NEMA PREMIUM
	NEMA PREMIUM (OLD LOGO)
Ambient Temperature	40 °C
Auxiliary Box	NO AUXILLARY BOX
Auxiliary Box Lead Termination	None
Base Indicator	Rigid
Bearing Grease Type	Polyrex EM (-20F +300F)
Blower	None
Current @ Voltage	48.000 A @ 230.0 V
	52.000 A @ 208.0 V
	24.000 A @ 460.0 V
Design Code	A
Drip Cover	No Drip Cover
Duty Rating	CONT
Efficiency @ 100% Load	93.0 %
Electrically Isolated Bearing	Not Electrically Isolated
Feedback Device	NO FEEDBACK
Front Face Code	Standard
Front Shaft Indicator	None

Part Detail

Revision	T
Type	AC
Mech. spec.	09C106
Base	
Status	PRD/A
Elec. spec.	09WGT459
Layout	09LYC106
Eff. date	04-16-2024
CD Diagram	CD0180
Poles	04
Leads	9#10
Proprietary	False
Created date	11-17-2017

Heater Indicator	No Heater
High Voltage Full Load Amps	24.0 a
Insulation Class	F
Inverter Code	Inverter Ready
KVA Code	J
Lifting Lugs	Standard Lifting Lugs
Locked Bearing Indicator	No Locked Bearing
Motor Lead Exit	Ko Box
Motor Lead Quantity/Wire Size	9 @ 10 AWG
Motor Lead Termination	Flying Leads
Motor Standards	NEMA
Motor Type	0960M
Mounting Arrangement	F2
Number of Poles	4
Overall Length	23.36 IN
Power Factor	83
Product Family	General Purpose
Pulley End Bearing Type	Ball
Pulley Face Code	Standard
Pulley Shaft Indicator	Standard
Rodent Screen	None
Service Factor	1.15
Shaft Diameter	1.625 IN
Shaft Extension Location	Pulley End
Shaft Ground Indicator	No Shaft Grounding
Shaft Rotation	Reversible
Shaft Slinger Indicator	Shaft Slinger
Speed	1770 rpm
Speed Code	Single Speed
Starting Method	Direct on line
Thermal Device - Bearing	None
Thermal Device - Winding	None
Vibration Sensor Indicator	No Vibration Sensor
Winding Thermal 1	None

Winding Thermal 2	None

Nameplate

NP3441L									
CAT.NO.	EFM2334T								
SPEC.	09C106T459G1								
HP	20								
VOLTS	230/460								
AMP	48/24								
RPM	1770								
FRAME	256T	**HZ**	60				**PH**	3	
SER.F.	1.15	**CODE**	J	**DES**	A	**CL**	F		
NEMA-NOM-EFF	93	**PF**	83						
RATING	40C AMB-CONT								
CC	010A								
DE	6309	**ODE**	6208						
ENCL	TEFC	**SN**							
VPWM INVERTER READY									
CT6-60H(10:1)VT3-60H(20:1									
	SFA 54.4/27.2								

Accessories

Part number	Description	Multiplier
09-1309	C FACE KIT	A8

AC Induction Motor Performance Data
Record # 67948
Typical performance - not guaranteed values

Winding: 09WGT459-R001	**Type:** 0960M	**Enclosure:** TEFC

Nameplate Data				**460 V, 60 Hz: High Voltage Connection**	
Rated Output (HP)			20	**Full Load Torque**	59.27 LB-FT
Volts			230/460	**Start Configuration**	direct on line
Full Load Amps			48/24	**Breakdown Torque**	232 LB-FT
R.P.M.			1770	**Pull-up Torque**	126 LB-FT
Hz	60	**Phase**	3	**Locked-rotor Torque**	141 LB-FT
NEMA Design Code	A	**KVA Code**	J	**Starting Current**	198 A
Service Factor (S.F.)			1.15	**No-load Current**	10.4 A
NEMA Nom. Eff.	93	**Power Factor**	83	**Line-line Res. @ 25ºC**	0.33814 Ω
Rating - Duty			40C AMB-CONT	**Temp. Rise @ Rated Load**	58°C
S.F. Amps				**Temp. Rise @ S.F. Load**	70°C
				Locked-rotor Power Factor	26.9

Load Characteristics 460 V, 60 Hz, 20 HP

% of Rated Load	**25**	**50**	**75**	**100**	**125**	**150**	**S.F.**
Power Factor	45	67	78	83	86	87	85
Efficiency	89.2	93	93.7	93.6	93.1	92.4	93.3
Speed	1793.2	1786.4	1779.1	1771.9	1763.7	1755.3	1767
Line amperes	11.8	15	19.2	24	29.3	34.9	27.2

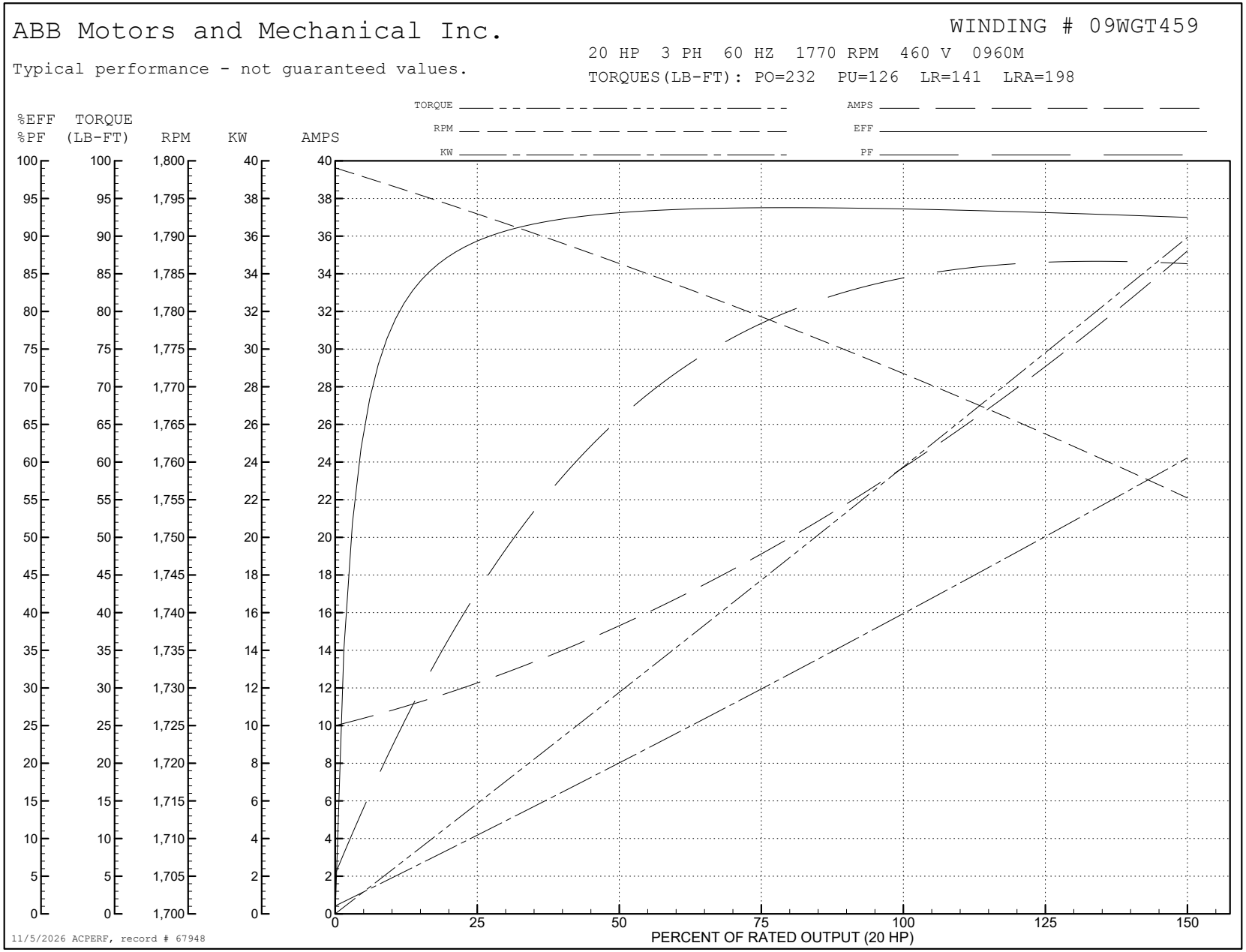
ABB Motors and Mechanical Inc.
WINDING # 09WGT459
Typical performance - not guaranteed values.
20 HP 3 PH 60 HZ 1770 RPM 460 V 0960M
TORQUES(LB-FT): PO=232 PU=126 LR=141 LRA=198
TORQUE
RPM
KW
AMPS
EFF
PF
%EFF %PF
TORQUE (LB-FT)
RPM
KW
AMPS
PERCENT OF RATED OUTPUT (20 HP)
11/5/2026 ACPERF, record # 67948

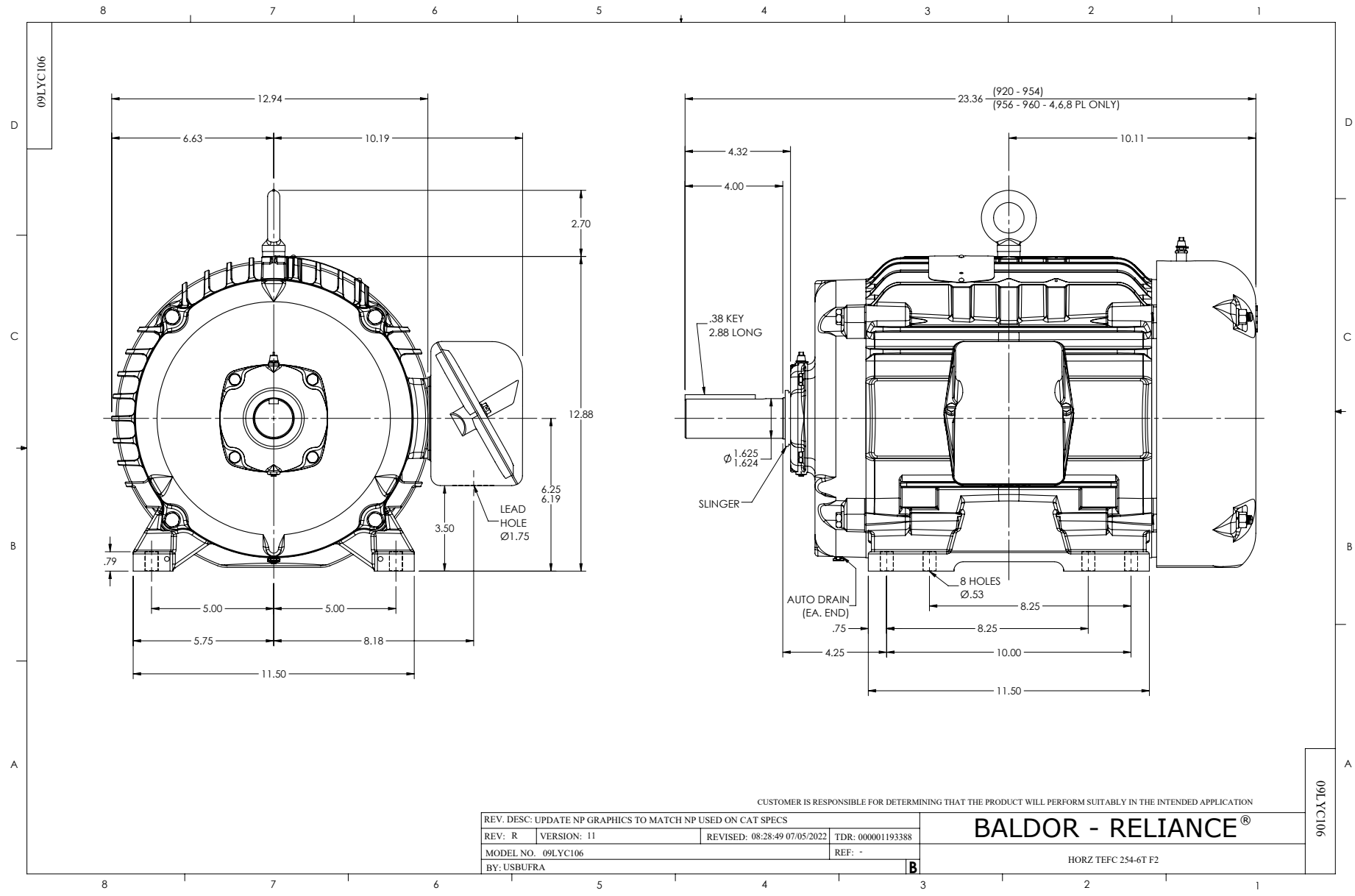
09LYC106
12.94
6.63
10.19
2.70
12.88
6.25
6.19
3.50
LEAD HOLE Ø1.75
.79
5.00
5.00
5.75
8.18
11.50
23.36 (920 - 954)
(956 - 960 - 4,6,8 PL ONLY)
10.11
4.32
4.00
.38 KEY
2.88 LONG
Ø 1.625
1.624
SLINGER
8 HOLES
Ø.53
AUTO DRAIN
(EA. END)
8.25
.75
8.25
4.25
10.00
11.50
CUSTOMER IS RESPONSIBLE FOR DETERMINING THAT THE PRODUCT WILL PERFORM SUITABLY IN THE INTENDED APPLICATION
REV. DESC: UPDATE NP GRAPHICS TO MATCH NP USED ON CAT SPECS
REV: R
VERSION: 11
REVISED: 08:28:49 07/05/2022
TDR: 000001193388
MODEL NO. 09LYC106
REF: -
BY: USBUFRA
B
BALDOR - RELIANCE®
HORZ TEFC 254-6T F2
09LYC106

CD0180

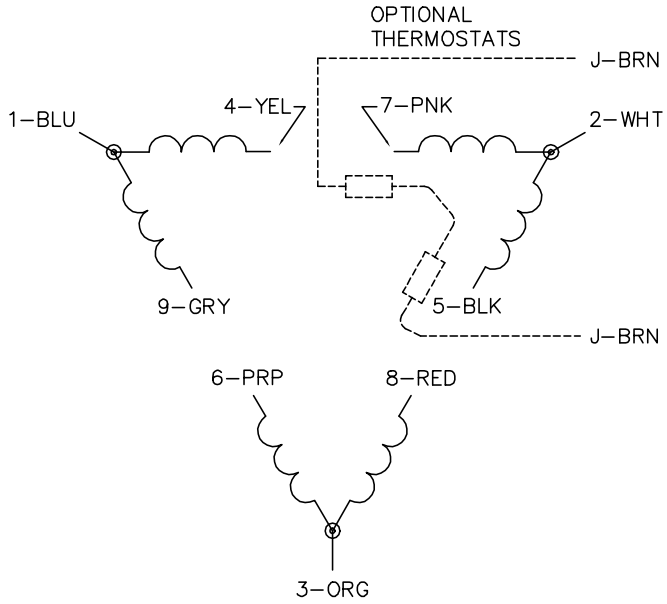

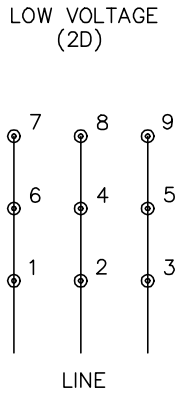

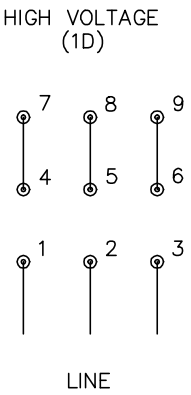

NOTES:

1. INTERCHANGE ANY TWO LINE LEADS TO REVERSE ROTATION.
2. OPTIONAL THERMOSTATS ARE PROVIDED WHEN SPECIFIED.
3. ACTUAL NUMBER OF INTERNAL PARALLEL CIRCUITS MAY BE A MULTIPLE OF THOSE SHOWN ABOVE.
4. LEAD COLORS ARE OPTIONAL. LEADS MUST ALWAYS BE NUMBERED AS SHOWN.

CD0180

REV. DESC: ADD CLASS CONN00000007		
REV. LTR: D	VERSION: 01	TDR: 000001099922
FILE: \AAA\00005\148	REVISED: 10:25:29 02/19/2019	BY: ENBRIR0
MTL: –		

BALDOR - RELIANCE®

3PH, DV, 9 LEADS, DELTA CONNECTION

SH 1 of 1