ABB BALDOR RELIANCE

Customer information packet

EM2276T

7.5HP, 1180RPM, 3PH, 60HZ, 254T, 0954M, TEFC, F
Class - None
Division - Not Applicable

Copyright © All product information within this document is subject to ABB Motors and Mechanical Inc. copyright © protection, unless otherwise noted.
11/5/2026 6:15:28 PM

Specifications

Enclosure	TEFC
Frame	254T
Frame Material	Iron
Frequency	60.00 Hz
Haz Area Class and Group	None
Haz Area Division	Not Applicable
Motor Letter Type	Three Phase
Output @ Frequency	7.500 HP @ 60 HZ
Phase	3
Synchronous Speed @ Frequency	1200 RPM @ 60 HZ
Voltage @ Frequency	460.0 V @ 60 HZ
	230.0 V @ 60 HZ
Agency Approvals	CURUSEEV
	NEMA PREMIUM
	NEMA PREMIUM (OLD LOGO)
Ambient Temperature	40 °C
Auxiliary Box	NO AUXILLARY BOX
Auxiliary Box Lead Termination	None
Base Indicator	Rigid
Bearing Grease Type	Polyrex EM (-20F +300F)
Blower	None
Current @ Voltage	22.000 A @ 230.0 V
	23.000 A @ 208.0 V
	11.000 A @ 460.0 V
Design Code	A
Drip Cover	No Drip Cover
Duty Rating	CONT
Efficiency @ 100% Load	91.0 %
Electrically Isolated Bearing	Not Electrically Isolated
Feedback Device	NO FEEDBACK
Front Face Code	Standard
Front Shaft Indicator	None

Part Detail

Revision	AN
Type	AC
Mech. spec.	09P11
Base	
Status	PRD/A
Elec. spec.	09WGT118
Layout	09LYP011
Eff. date	03-19-2024
CD Diagram	CD0005
Poles	06
Leads	9#12
Proprietary	False
Created date	08-21-2014

Heater Indicator	No Heater
High Voltage Full Load Amps	11.0 a
Insulation Class	F
Inverter Code	Inverter Ready
KVA Code	J
Lifting Lugs	Standard Lifting Lugs
Locked Bearing Indicator	Locked Bearing
Motor Lead Exit	Ko Box
Motor Lead Quantity/Wire Size	9 @ 12 AWG
Motor Lead Termination	Flying Leads
Motor Standards	NEMA
Motor Type	0954M
Mounting Arrangement	F1
Number of Poles	6
Overall Length	23.36 IN
Power Factor	70
Product Family	General Purpose
Pulley End Bearing Type	Ball
Pulley Face Code	Standard
Pulley Shaft Indicator	Standard
Rodent Screen	None
Service Factor	1.15
Shaft Diameter	1.625 IN
Shaft Extension Location	Pulley End
Shaft Ground Indicator	No Shaft Grounding
Shaft Rotation	Reversible
Shaft Slinger Indicator	Shaft Slinger
Speed	1180 rpm
Speed Code	Single Speed
Starting Method	Direct on line
Thermal Device - Bearing	None
Thermal Device - Winding	None
Vibration Sensor Indicator	No Vibration Sensor
Winding Thermal 1	None

Winding Thermal 2	None

Nameplate

NP3441LUA										
CAT.NO.	EM2276T									
SPEC	09P011T118									
HP	7.5									
VOLTS	230/460									
AMPS	22/11									
RPM	1180									
FRAME	254T	**HZ**	60	**PH**	3					
SF	1.15	**CODE**	J	**DES**	A	**CLASS**	F			
NEMA NOM. EFF	91	**PF**	70							
RATING	40C AMB-CONT									
CC	010A									
ENCL	TEFC	**SER**								
DE	6309	**ODE**	6208							
VPWM INVERTER READY	SFA 24.5/12.3									
CT6-60H(10:1)VT3-60H(20:1										
	50Hz 7.5HP 190/380V 25/12.5A									SF1.0

Accessories

Part number	Description	Multiplier
09-1309	C FACE KIT	A8

AC Induction Motor Performance Data
Record # 47544
Typical performance - not guaranteed values

Winding: 09WGT118-R001	**Type:** 0954M	**Enclosure:** TEFC

Nameplate Data				**460 V, 60 Hz: High Voltage Connection**	
Rated Output (HP)			7.5	**Full Load Torque**	33.2 LB-FT
Volts			230/460	**Start Configuration**	direct on line
Full Load Amps			22/11	**Breakdown Torque**	113 LB-FT
R.P.M.			1180	**Pull-up Torque**	41.3 LB-FT
Hz	60	**Phase**	3	**Locked-rotor Torque**	57.4 LB-FT
NEMA Design Code	A	**KVA Code**	J	**Starting Current**	74.8 A
Service Factor (S.F.)			1.15	**No-load Current**	6.06 A
NEMA Nom. Eff.	91	**Power Factor**	70	**Line-line Res. @ 25ºC**	0.87037 Ω
Rating - Duty			40C AMB-CONT	**Temp. Rise @ Rated Load**	36°C
S.F. Amps				**Temp. Rise @ S.F. Load**	42°C
				Locked-rotor Power Factor	25.8

Load Characteristics 460 V, 60 Hz, 7.5 HP

% of Rated Load	**25**	**50**	**75**	**100**	**125**	**150**	**S.F.**
Power Factor	32	52	63	70	74	75	72
Efficiency	83.2	89.4	90.9	91.1	90.7	89.9	90.9
Speed	1196.5	1192.4	1188.3	1183.7	1178.7	1173.2	1181
Line amperes	6.49	7.59	9.09	11	13.1	15.5	12.3

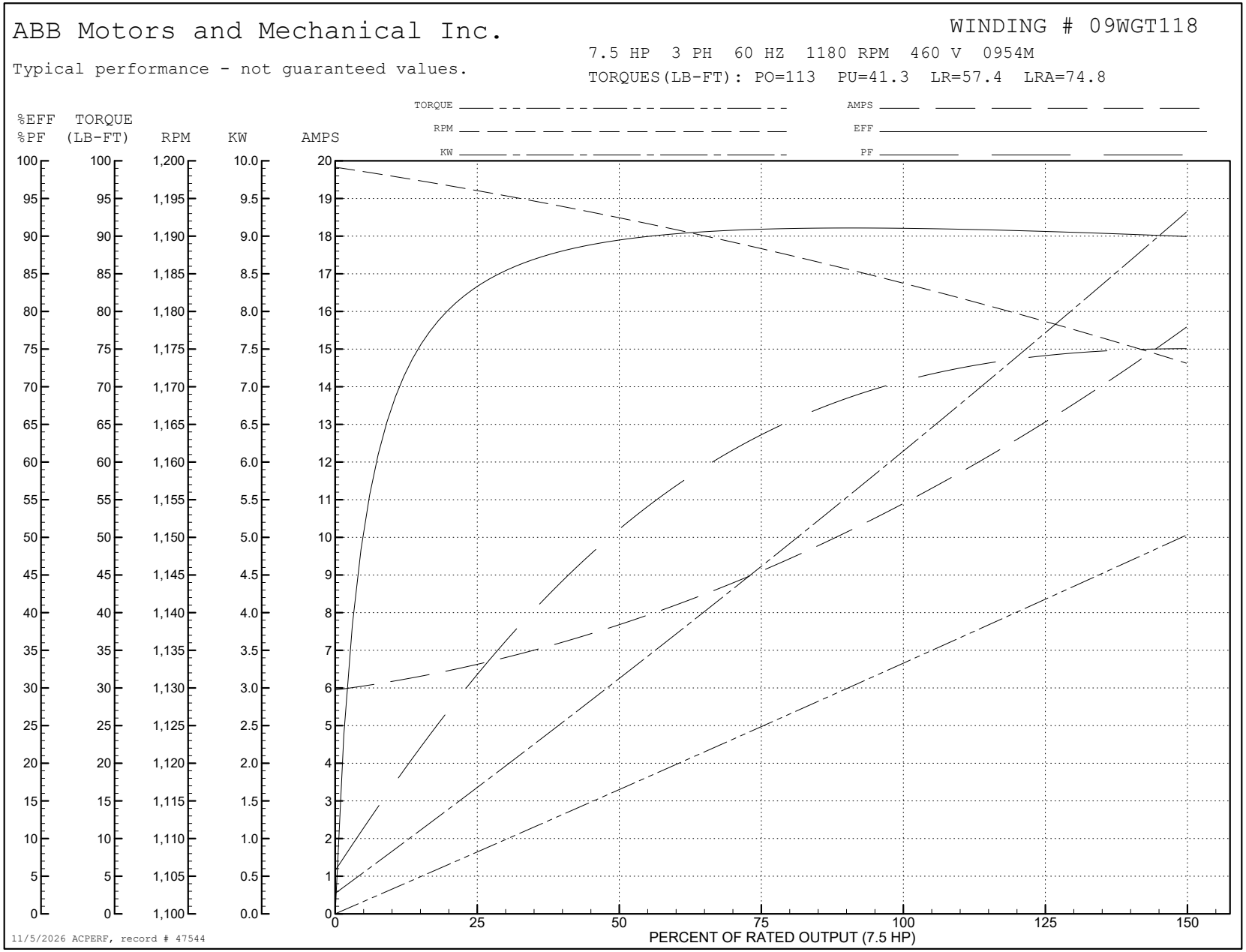
ABB Motors and Mechanical Inc.
WINDING # 09WGT118
7.5 HP 3 PH 60 HZ 1180 RPM 460 V 0954M
Typical performance - not guaranteed values.
TORQUES(LB-FT): PO=113 PU=41.3 LR=57.4 LRA=74.8
TORQUE
RPM
KW
AMPS
EFF
PF
%EFF %PF
TORQUE (LB-FT)
RPM
KW
AMPS
PERCENT OF RATED OUTPUT (7.5 HP)
11/5/2026 ACPERF, record # 47544

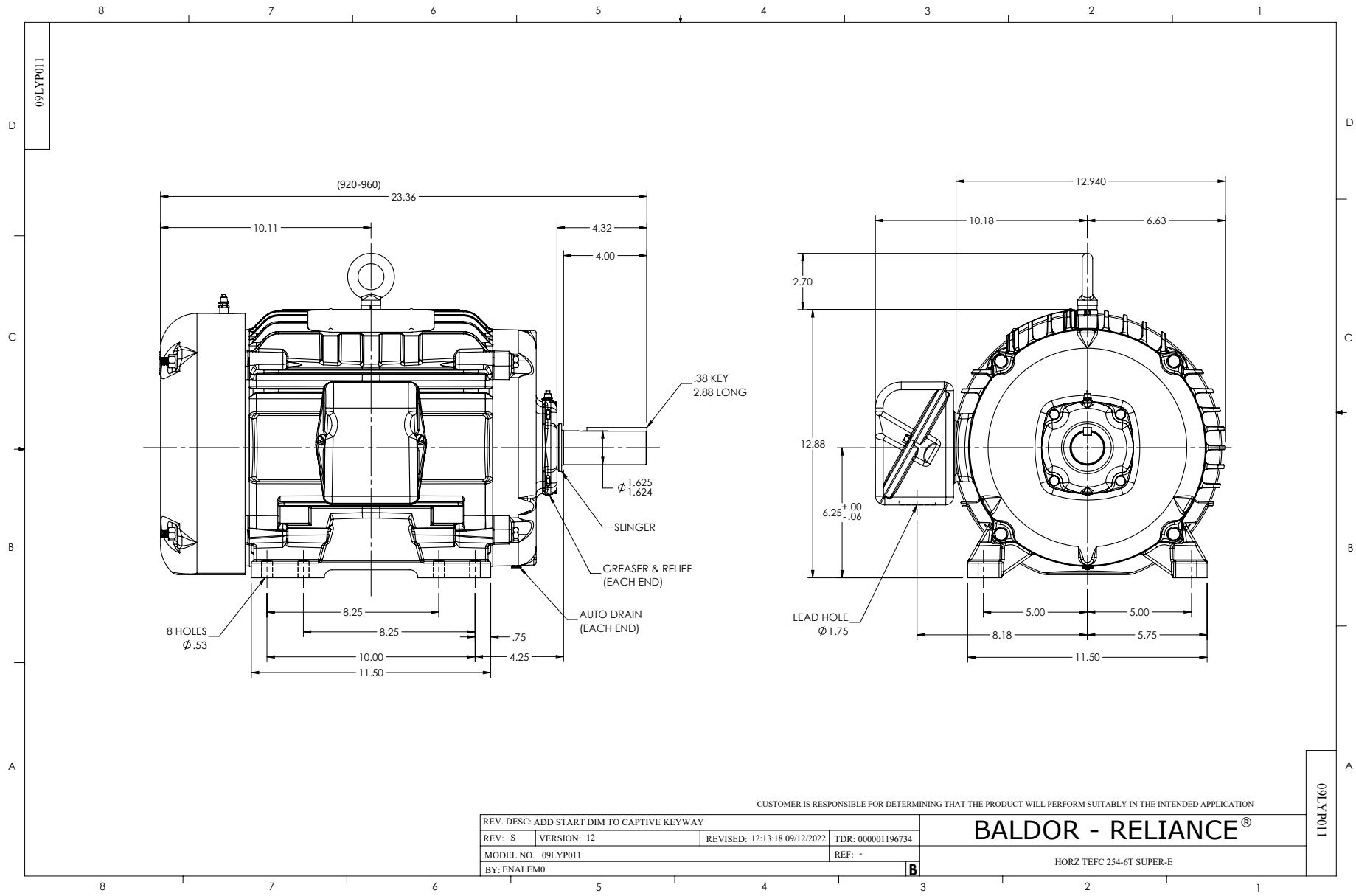
09LYP011
(920-960)
23.36
10.11
4.32
4.00
.38 KEY
2.88 LONG
Ø 1.625
1.624
SLINGER
GREASER & RELIEF
(EACH END)
AUTO DRAIN
(EACH END)
8 HOLES
Ø .53
8.25
8.25
.75
10.00
4.25
11.50
12.940
10.18
6.63
2.70
12.88
6.25 +.00 -.06
LEAD HOLE
Ø 1.75
5.00
5.00
8.18
5.75
11.50
CUSTOMER IS RESPONSIBLE FOR DETERMINING THAT THE PRODUCT WILL PERFORM SUITABLY IN THE INTENDED APPLICATION
REV. DESC: ADD START DIM TO CAPTIVE KEYWAY
REV: S
VERSION: 12
REVISED: 12:13:18 09/12/2022
TDR: 000001196734
MODEL NO. 09LYP011
REF: -
BY: ENALEM0
B
BALDOR - RELIANCE®
HORZ TEFC 254-6T SUPER-E
09LYP011

CD0005

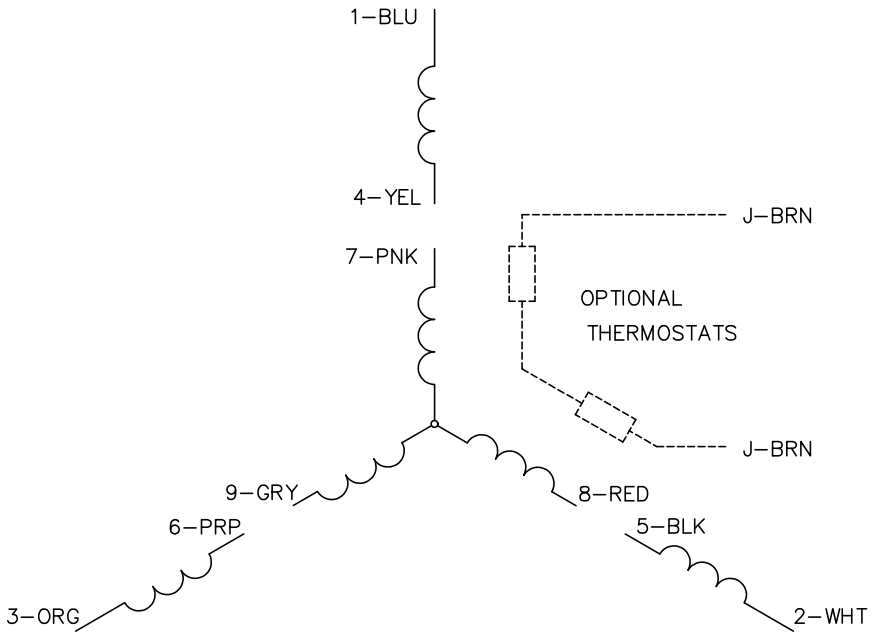

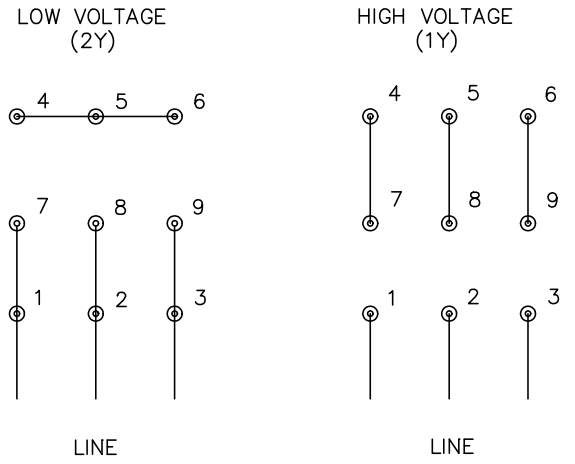

NOTES:

1. INTERCHANGE ANY TWO LINE LEADS TO REVERSE ROTATION.
2. OPTIONAL THERMOSTATS ARE PROVIDED WHEN SPECIFIED.
3. ACTUAL NUMBER OF INTERNAL PARALLEL CIRCUITS MAY BE A MULTIPLE OF THOSE SHOWN ABOVE.
4. LEAD COLORS ARE OPTIONAL. LEADS MUST ALWAYS BE NUMBERED AS SHOWN.

CD0005

REV. DESC: REVISE TO SHOW OPTIONAL COLORS			BALDOR ELECTRIC Co.
REV. LTR: E	BY: JLP	REVISED: 01/19/99 10:15	TDR: 0171435
CD0005		FILE: AAA00005140	MDL: –
		MTL: –	3PH, DV, 9 LEADS