FLOOD LIGHT

ATLAS

Compact Adjustable LED Flood Light

High-Efficacy Flood Lighting with Selectable CCT



The ATLAS 3RD Gen LED Flood Light is a durable and energy-efficient lighting fixture designed for commercial, industrial, and outdoor lighting applications. Built with high-performance Lumileds LEDs and a rugged die-cast aluminum housing, the fixture delivers reliable illumination while maintaining long operational life.
Its compact design provides uniform light distribution, enhancing visibility and safety across a wide range of outdoor environments. The fixture is engineered for dependable operation in commercial installations while requiring minimal maintenance.
The ATLAS 3RD Gen LED Flood Light is suitable for a wide range of applications including building exteriors, parking areas, parks, advertising displays, rail stations, industrial facilities, and general area lighting where efficient and consistent illumination is required.

PRODUCT FEATURES

- Field-selectable wattage: 30W / 40W / 50W
- High Efficacy Up to 143 lm/W
- Selectable CCT: 3000K / 4000K / 5000K
- 0-10V dimmable
- Die-cast aluminum housing with PC Lens
- Knuckle & Yoke Mount included
- Smooth, diffused lens for even light distribution with UV resistance
- Dust and water-resistant IP65 rated
- Light spread 150°
- Built-in Surge Protection 2.5kV
- Wide input voltage 120-277V AC
- UL & DLC listed
- 5-year warranty

CONTROLS & ACCESSORIES

- 0–10V Dimming
- Adjustable CCT Button
- Built-in Surge Protection 2.5kV
- Knuckle & Yoke Mount included

APPLICATIONS

- Driveways
- Yards
- Residential exteriors
- Building perimeter lighting
- Small parking lots
- Signage lighting
- Walkways
- Security lighting
- Wall wash applications

ELECTRICAL SPECIFICATIONS

- Max Lumens 7150Lm
- Input Voltage 120–277VAC
- Frequency 50/60Hz
- Built-in Surge Protection 2.5kV
- Operating Temp -30°C to 45°C
- CRI > 80
- Built-in Photocell
- Light Spread 150°
- PF ≥ 0.9
- THD ≤ 20%

MECHANICAL SPECIFICATIONS

- Die-cast aluminum housing with PC Lens
- Finish Bronze
- IP65 Rated
- Knuckle & Yoke Mount included
- LED Type SMD2835

BEYOND™ LED TECHNOLOGY
(866) 786-1117 • www.BeyondLEDTechnology.com

Due to continuous product improvement, information in this document is subject to change.

ATLAS
LED Flood Light

WHY CONTRACTORS CHOOSE ATLAS

- Adjustable CCT reduces inventory SKUs
- Light Spread 150°
- Compact form factor for residential and small commercial jobs
- Up to 143 lm/W — strong lumen output for its size class
- 120–277V compatibility eliminates voltage concerns
- Premium Lumileds chips for high CRI and long life

CERTIFICATIONS & COMPLIANCE

- UL Listed
- DLC Qualified
- IP65 Rated

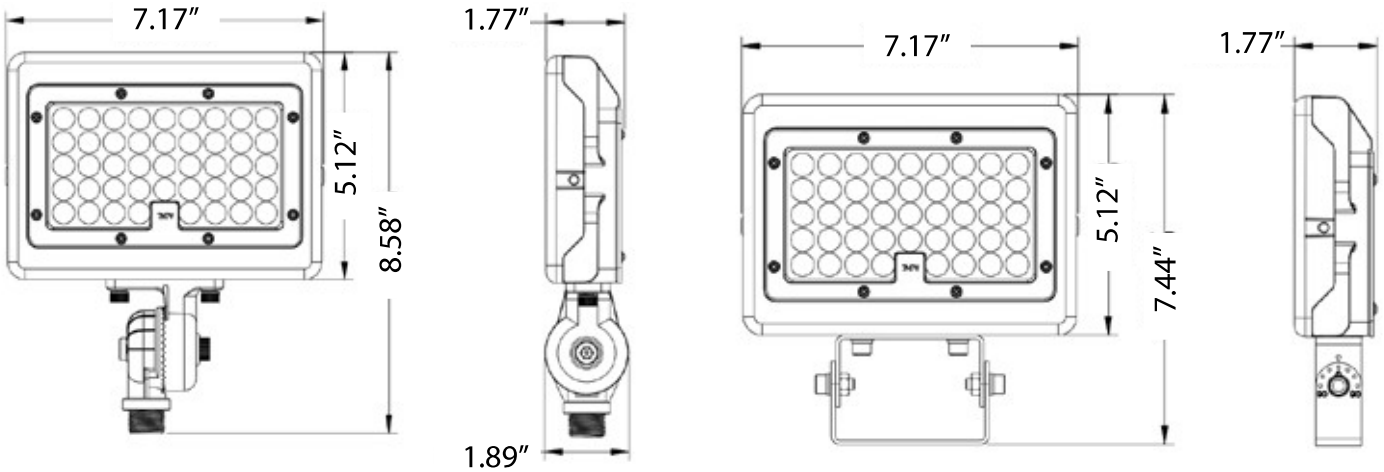

QUICK SPEC TABLE

SKU	MODEL NUMBER	ADJ. WATT	MAX LUMENS	ADJ. CCT	INPUT VOLTAGE	CRI	LIGHT SPREAD	CONSTRUCTION	DIMMING	IP RATING
157544	AST-FL06E-50WBH8DA1-BRAM30/40/50W	30W/40W/50W	7150	3K/4K/5K	120-277V	>80	150°	Die-cast Aluminum+PC	0-10V	IP65

ATLAS
LED Flood Light

Installation

IMPORTANT SAFETY INFORMATION
- Installation must be performed by a qualified licensed electrician
- Disconnect power before installation or servicing
- Verify supply voltage matches fixture rating
- Use minimum 75°C rated supply conductors
- Follow all applicable national and local electrical codes

GENERAL INSTALLATION NOTES
- Suitable for outdoor use
- Do not energize fixture until all wiring connections are secured
- Do not use portable generators for fixture testing
- Inspect fixture for damage before installation
- Ensure mounting surface is structurally secure
- Maintain IP65 seal integrity after installation.

WIRING INSTRUCTIONS
Line Connections

- LINE (L) - Black/Brown (ACL)
- NEUTRAL (N) - White/Blue (ACN)
- GROUND (G) - Green/Yellow

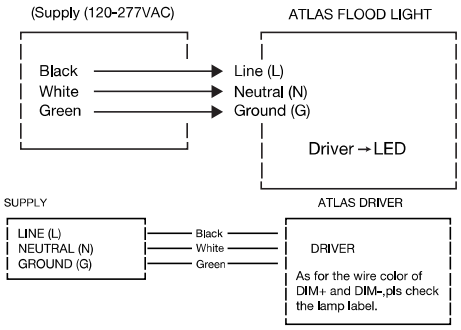

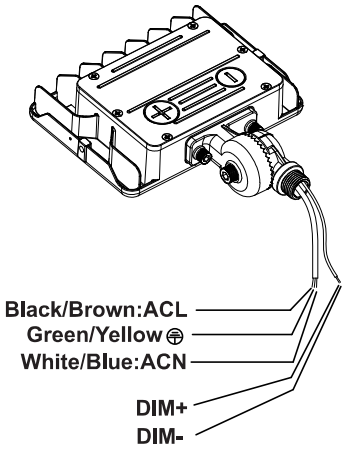

As for the wire color of DIM+ and DIM-,pls check the lamp label.

DIMMING
0–10V Dimming Leads

As for the wire color of DIM+ and DIM-,pls check the lamp label.

BUILT-IN PHOTOCELL
- Auto ON at dusk
- Auto OFF at dawn
- Wall switch must remain ON for photocell function

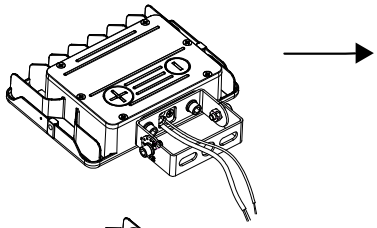

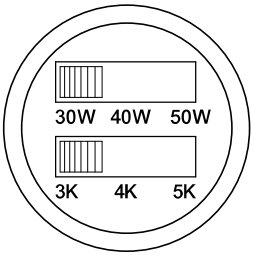

CCT ADJUSTMENT
- Remove 3/4" adjustment plug
- Select desired CCT using internal switch
- Reinstall and tighten plug before energizing

YOKE & KNUCKLE MOUNT INSTALLATION
- Remove mounting screws from fixture bracket plate
- Route supply conductors through bracket
- Secure bracket to pole or wall surface
- Attach fixture to bracket and tighten hardware
- Adjust angle as required and lock securely

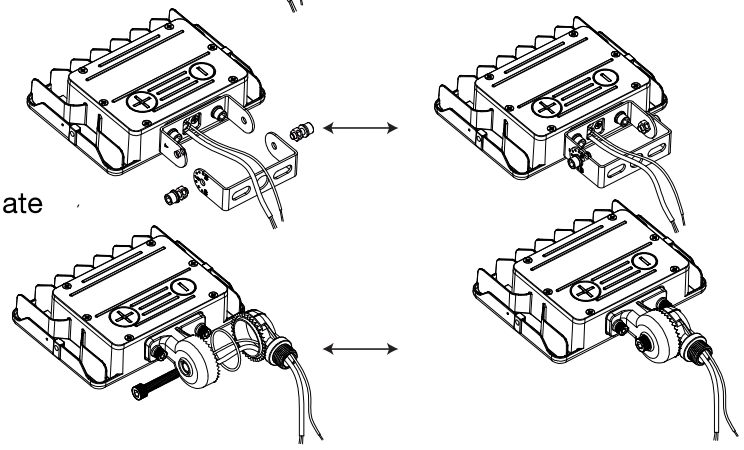

ATLAS
LED Flood Light

Installation

FINAL CHECK
- Confirm all connections are secure
- Verify voltage
- Ensure adjustment plug is tightened
- Energize circuit
- Confirm proper operation

Packaging

SKU	Box Type	Box Dimensions	Qty	Net Weight	Gross Weight
157544	Outer Box	16.54" x 11.22" x 9.06"	5 PCS/Box	12.75LBS	15.19LBS
	Inner Box	10.63" x 3.15" x 8.27"	1 PC/Box	2.55LBS	2.82LBS

Warranty

- 5 Years warranty

https://beyondledtechnology.com/pages/terms-and-conditions