PRODUCT INFORMATION PACKET

Model No: 145TTDR14090
Catalog No: FX34BB007
FLEX-IN-1™ General Purpose Motor, 0.75 & 0.50 HP, 3 Ph, 60 & 50 Hz, 208-230/460 & 190/380 V, 1200 & 1000 RPM, 145T Frame, DP



Regal and LEESON are trademarks of Regal Rexnord Corporation or one of its affiliated companies.
©2026 Regal Rexnord Corporation, All Rights Reserved. MC017097E

Nameplate Specifications

Phase	3	Output HP	0.75 & 0.50 Hp
Output KW	0.56 & 0.37 kW	Voltage	208-230/460 & 190/380 V
Speed	1140 & 970 rpm	Service Factor	1.15 & 1.00
Frame	145T	Enclosure	Drip Proof
Thermal Protection	Thermostat	Efficiency	81.5 & 79.5 %
Ambient Temperature	40 °C	Frequency	60 & 50 Hz
Current	2.8-2.8/1.4 & 2.4/1.2 A	Power Factor	64
Duty	Continuous	Insulation Class	F
Design Code	B	KVA Code	K
Drive End Bearing Size	6205	Opp Drive End Bearing Size	6203
UL	Recognized	CSA	Y
CE	Y	IP Code	22
Number of Speeds	1		

Technical Specifications

Electrical Type	Squirrel Cage Inverter Rated	Starting Method	Line Or Inverter
Poles	6	Rotation	Reversible
Resistance Main	21 Ohms	Mounting	Bolt-on Base
Motor Orientation	Horizontal	Drive End Bearing	Ball
Opp Drive End Bearing	Ball	Frame Material	Rolled Steel
Shaft Type	T	Assembly/Box Mounting	F1 ¿ F2/F3 CAPABLE
Inverter Load	CONSTANT 2:1		
Connection Drawing	CDTD113	Outline Drawing	OL56100882-001

This is an uncontrolled document once printed or downloaded and is subject to change without notice. Date Created:04/08/2026

Uncontrolled Copy

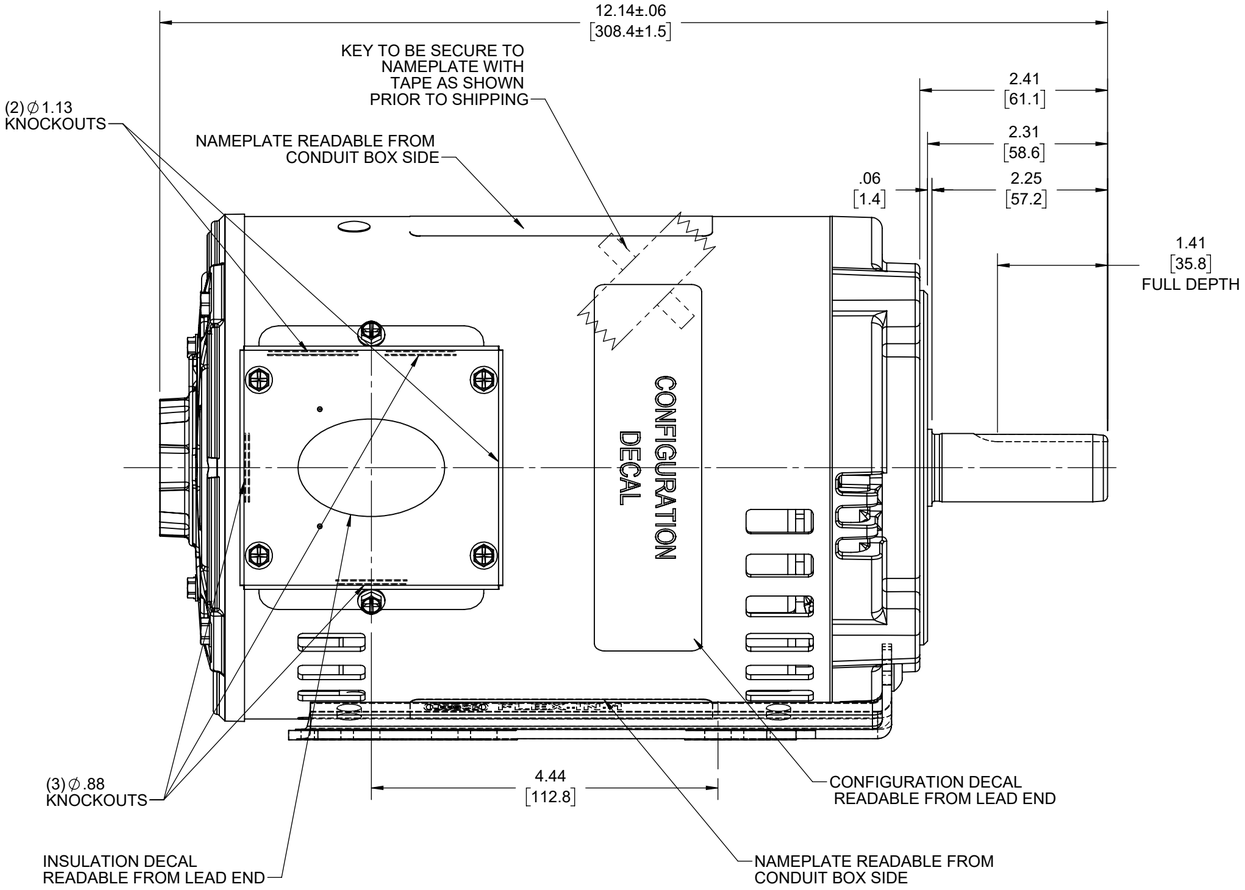

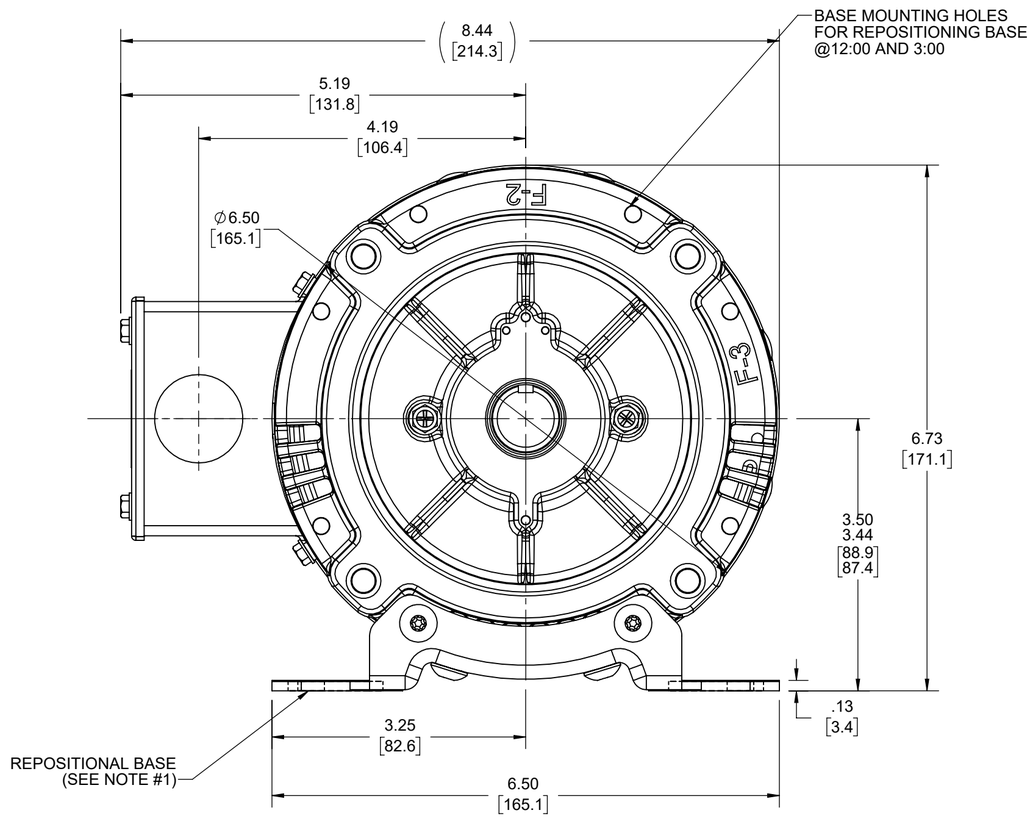

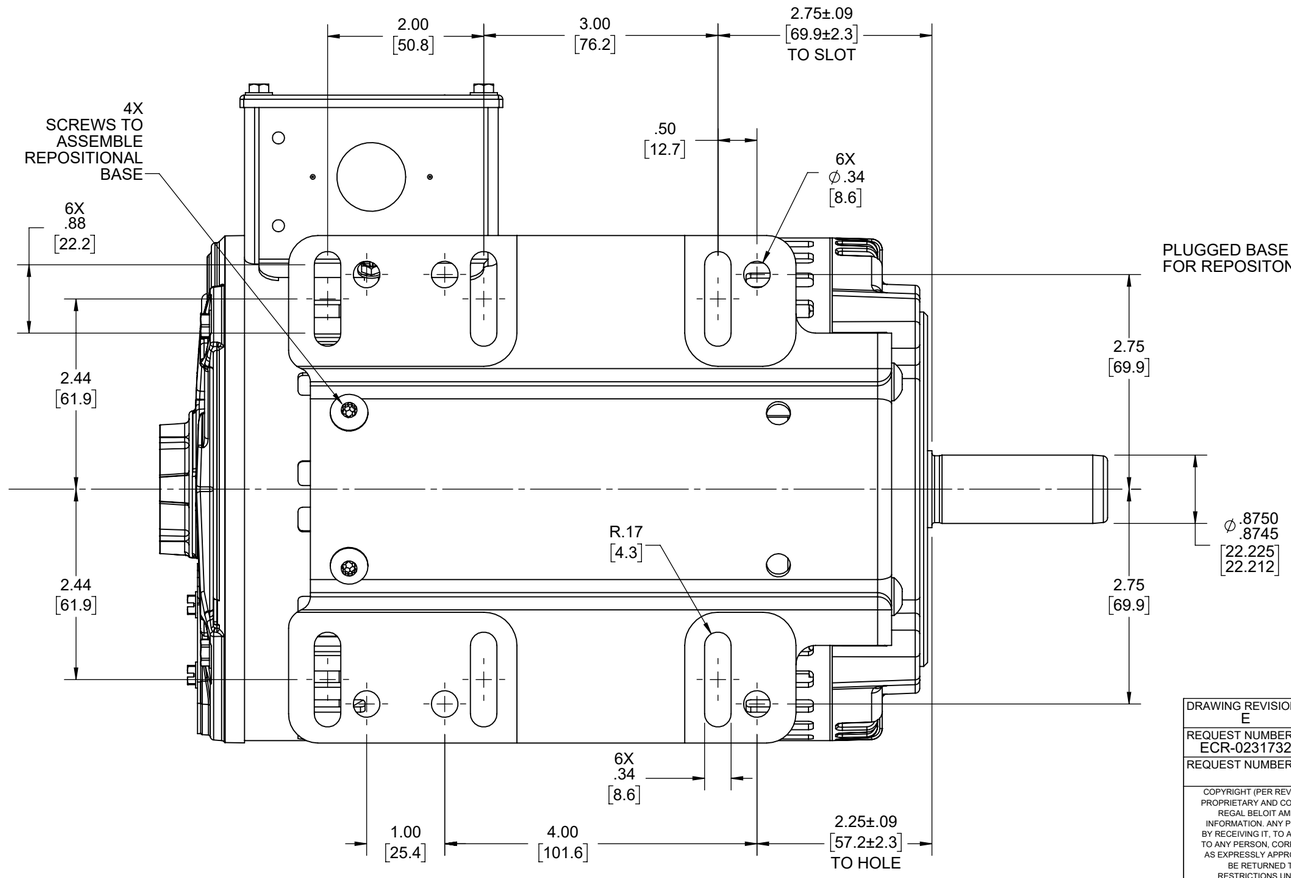

NOTES:

1) REPOSITIONAL BASE CAN BE REPOSITIONED TO 12:00 OR 3:00 FACING SHAFT END OF MOTOR FOR NEMA F-2 OR F-3 CONDUIT BOX LOCATION.

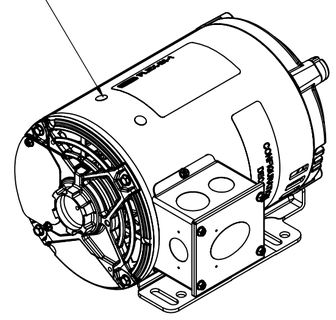

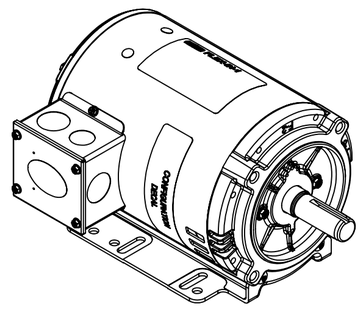

DRAWING REVISION: E	REVISION BY: M.P	REV DATE/© DATE: 02/28/2024	TOLERANCES (EXCEPT AS NOTED):	DRAWN BY: PS	Regal Rexnord — Regal Beloit America, Inc.
REQUEST NUMBER: ECR-0231732	APPROVED BY: PVR	DATE: 02/28/2024	DEC. INCH mm ANGLE .X ±0.1 [±3] ±0.5° .XX ±0.02 [±0.5] .XXX ±0.005 [±0.13] .XXXX ±0.0005 [±0.013]	DATE: 05/17/2023	
REQUEST NUMBER DESCRIPTION: UPDATED AS PER ECR			REMOVE BURRS & BREAK SHARP EDGES: .003/.015 [.08/.38] X 45° CORNER FILLETS: R.02 [.5] MACHINED SURFACES: 125/ 3.2/ INCH mm	APPROVED BY: SN	DESCRIPTION: OUTLINE 56-140FR, BOLT-ON
			mm DIMENSIONS IN [BRACKETS] ARE FOR REFERENCE ONLY	DATE: 05/17/2023	
				REFERENCE: OL56100881-XXX	MATERIAL / PROCESS/FINISH
				THIRD ANGLE PROJECTION	SIZE: C — DRAWING NUMBER: OL56100882-001 — SHEET: 1 OF3

COPYRIGHT (PER REVISION DATE) REGAL BELOIT AMERICA, INC. ALL RIGHTS RESERVED. PROPRIETARY AND CONFIDENTIAL INFORMATION - THIS DOCUMENT IS THE PROPERTY OF REGAL BELOIT AMERICA, INC. ("OWNER") AND CONTAINS OWNER'S PROPRIETARY INFORMATION. ANY PERSON, CORPORATION OR OTHER FIRM RECEIVING IT IS DEEMED, BY RECEIVING IT, TO AGREE THAT IT, AND/OR ANY PART OF IT, SHALL NOT BE DISCLOSED TO ANY PERSON, CORPORATION OR OTHER ENTITY, DUPLICATED, AND/OR USED, EXCEPT AS EXPRESSLY APPROVED IN WRITING IN ADVANCE BY OWNER. THIS DOCUMENT SHALL BE RETURNED TO OWNER UPON REQUEST. IT MAY BE SUBJECT TO CERTAIN RESTRICTIONS UNDER APPLICABLE EXPORT CONTROL LAWS AND REGULATIONS.

Uncontrolled Copy

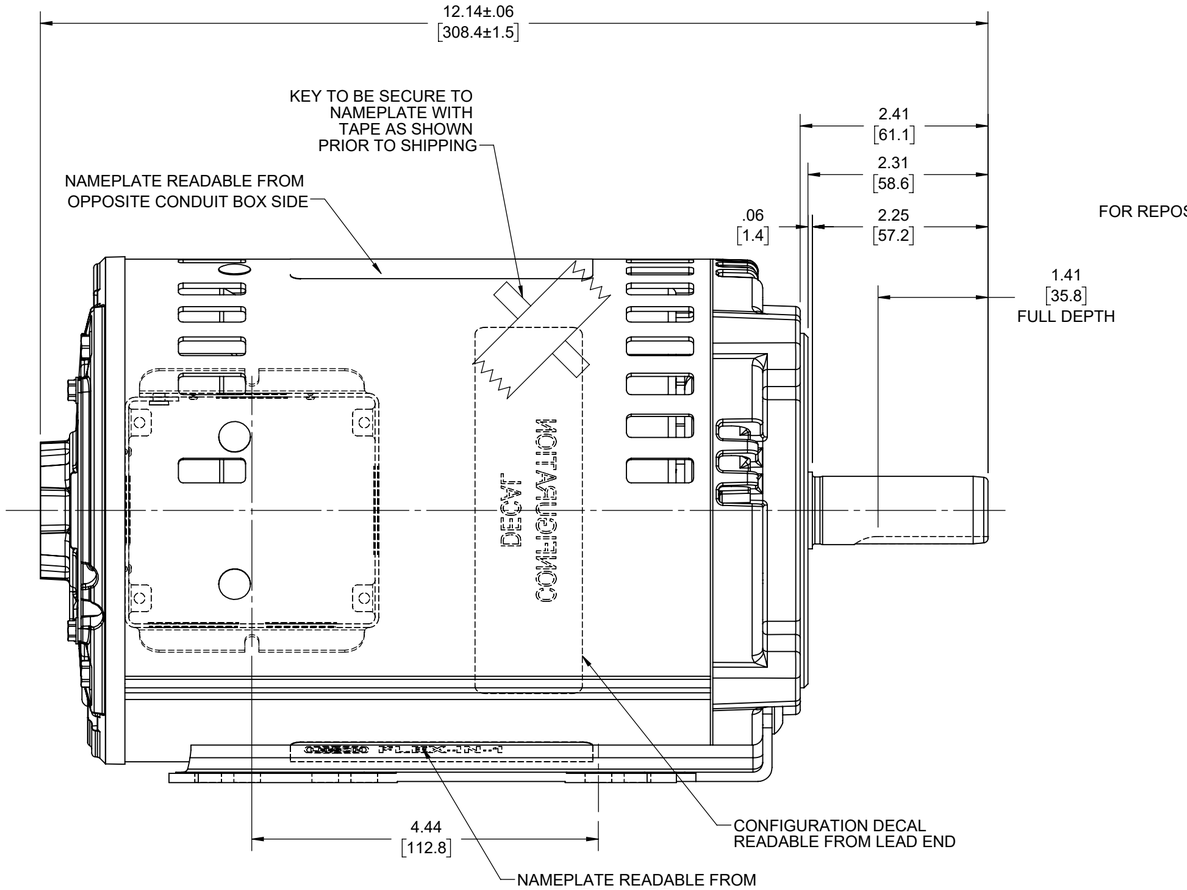

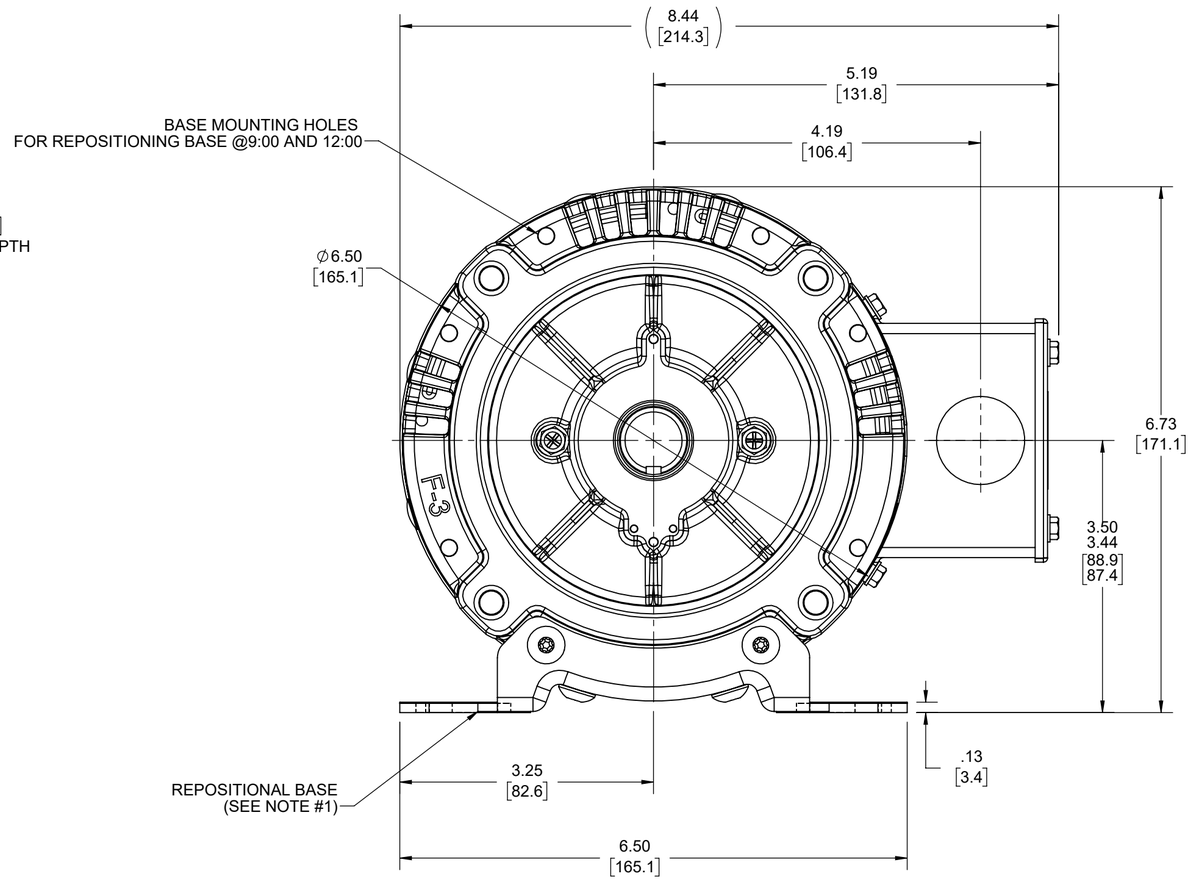

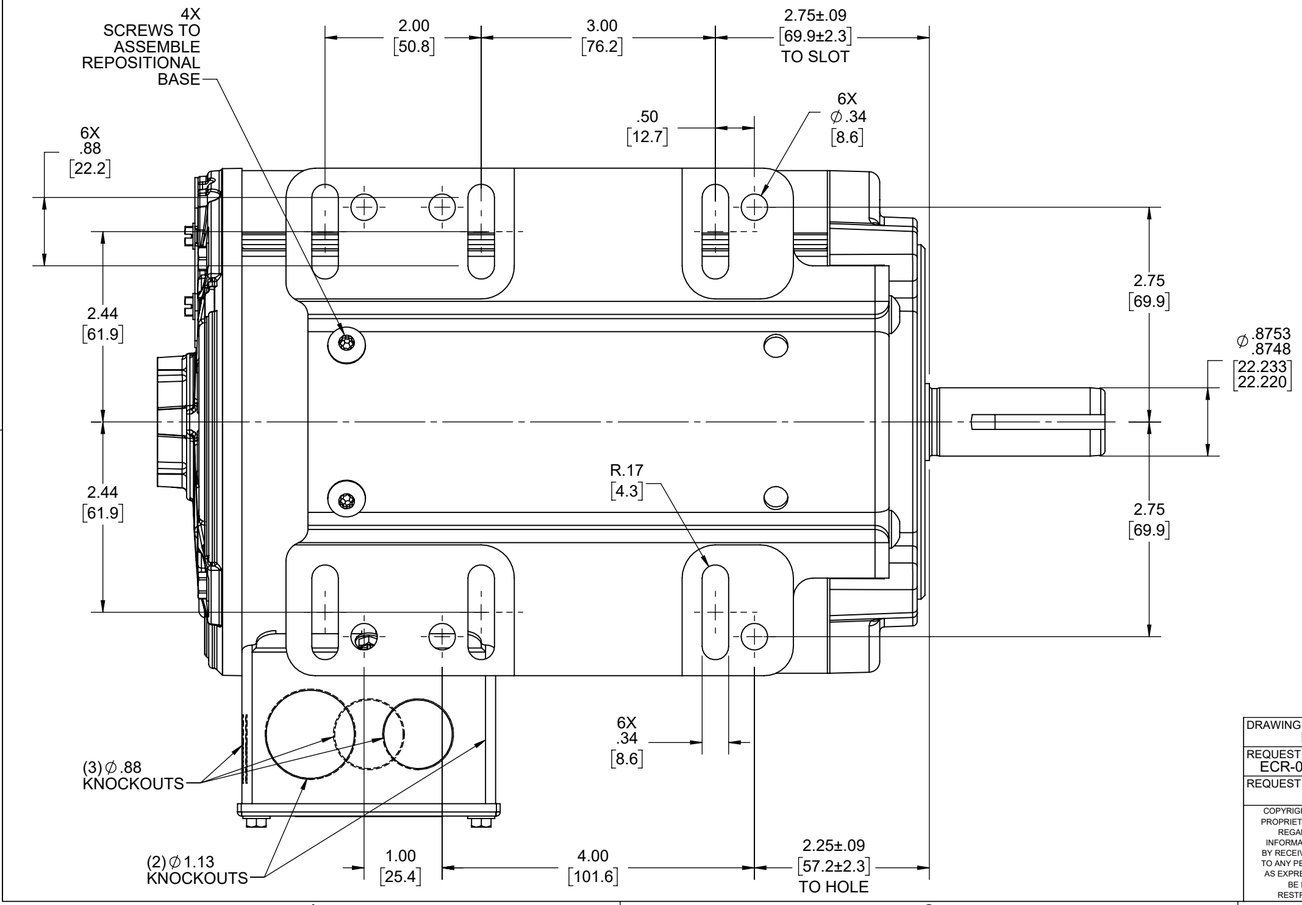

NOTES:

1) REPOSITIONAL BASE CAN BE REPOSITIONED TO 12:00 OR 9:00 FACING SHAFT END OF MOTOR FOR NEMA F-1 OR F-3 CONDUIT BOX LOCATION.

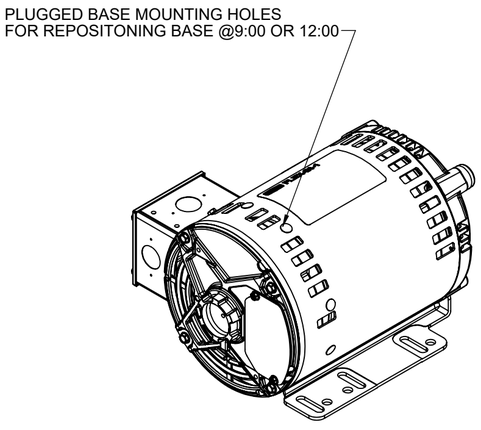

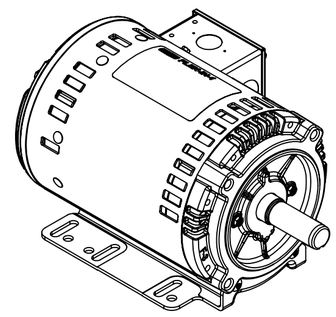

DRAWING REVISION: E	REVISION BY: M.P	REV DATE/© DATE: 02/28/2024	TOLERANCES (EXCEPT AS NOTED):	DRAWN BY: PS	Regal Rexnord — Regal Beloit America, Inc.
REQUEST NUMBER: ECR-0231732	APPROVED BY: PVR	DATE: 02/28/2024	DEC. INCH mm ANGLE .X ±0.1 [±3] ±0.5° .XX ±0.02 [±0.5] .XXX ±0.005 [±0.13] .XXXX ±0.0005 [±0.013]	DATE: 05/17/2023	
REQUEST NUMBER DESCRIPTION: UPDATED AS PER ECR			REMOVE BURRS & BREAK SHARP EDGES: .003/.015 [.08/.38] X 45° CORNER FILLETS: R.02 [.5] MACHINED SURFACES: 125 INCH / 3.2 mm	APPROVED BY: SN	DESCRIPTION: OUTLINE 56-140FR, BOLT-ON
				DATE: 05/17/2023	
			mm DIMENSIONS IN [BRACKETS] ARE FOR REFERENCE ONLY	REFERENCE: OL56100881-XXX	MATERIAL / PROCESS/FINISH
				THIRD ANGLE PROJECTION	SIZE: C — DRAWING NUMBER: OL56100882-001 — SHEET: 2 OF3

COPYRIGHT (PER REVISION DATE) REGAL BELOIT AMERICA, INC. ALL RIGHTS RESERVED. PROPRIETARY AND CONFIDENTIAL INFORMATION - THIS DOCUMENT IS THE PROPERTY OF REGAL BELOIT AMERICA, INC. ("OWNER") AND CONTAINS OWNER'S PROPRIETARY INFORMATION. ANY PERSON, CORPORATION OR OTHER FIRM RECEIVING IT IS DEEMED, BY RECEIVING IT, TO AGREE THAT IT, AND/OR ANY PART OF IT, SHALL NOT BE DISCLOSED TO ANY PERSON, CORPORATION OR OTHER ENTITY, DUPLICATED, AND/OR USED, EXCEPT AS EXPRESSLY APPROVED IN WRITING IN ADVANCE BY OWNER. THIS DOCUMENT SHALL BE RETURNED TO OWNER UPON REQUEST. IT MAY BE SUBJECT TO CERTAIN RESTRICTIONS UNDER APPLICABLE EXPORT CONTROL LAWS AND REGULATIONS.

Uncontrolled Copy

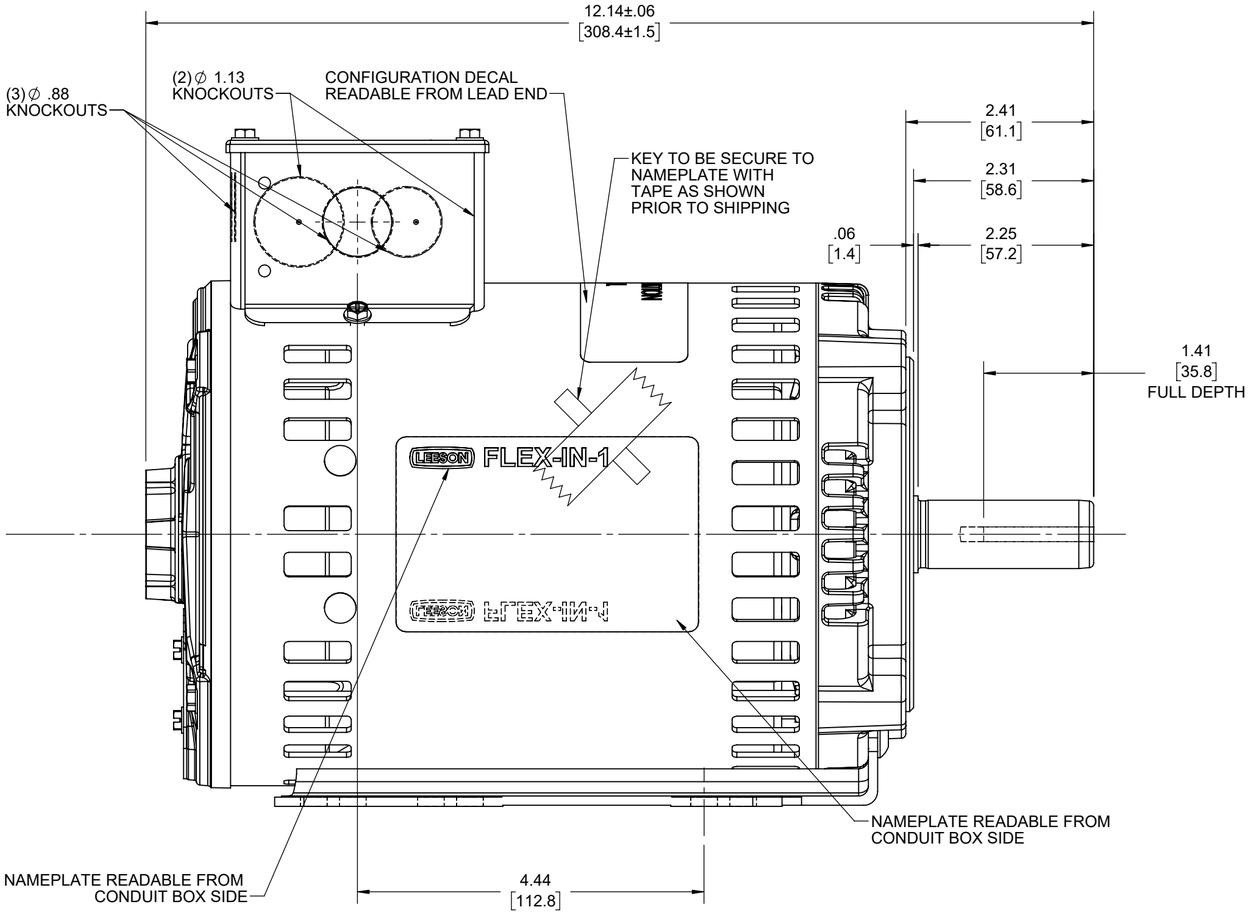

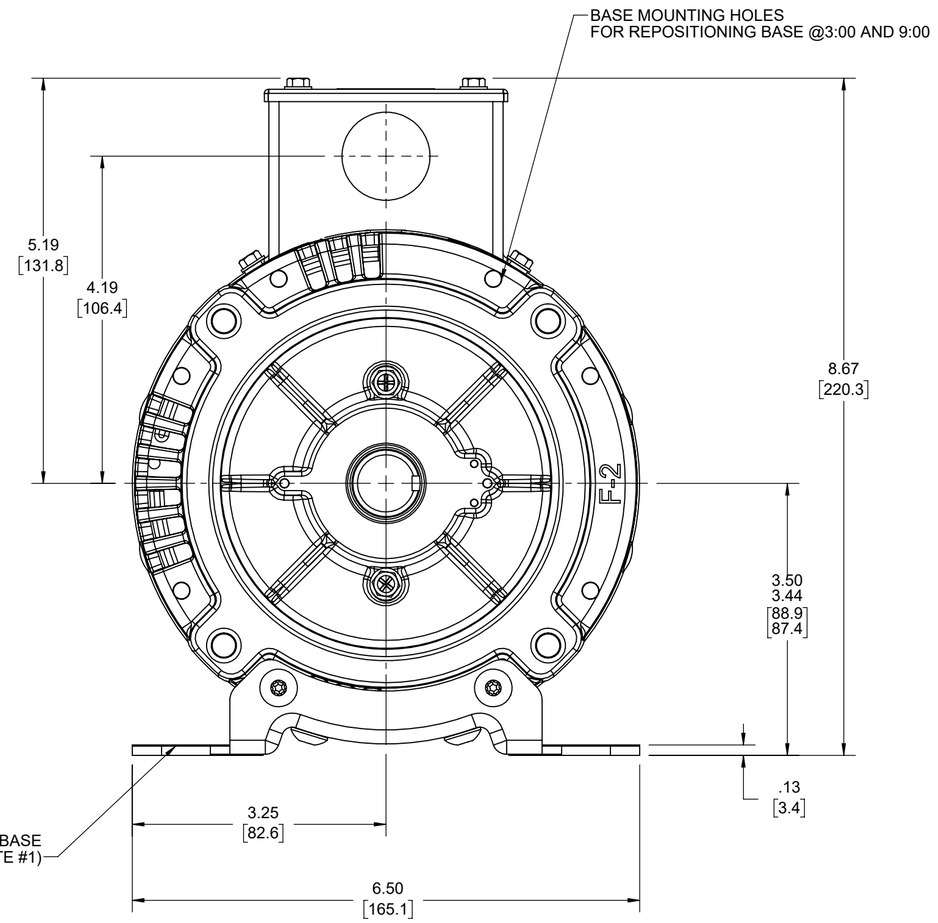

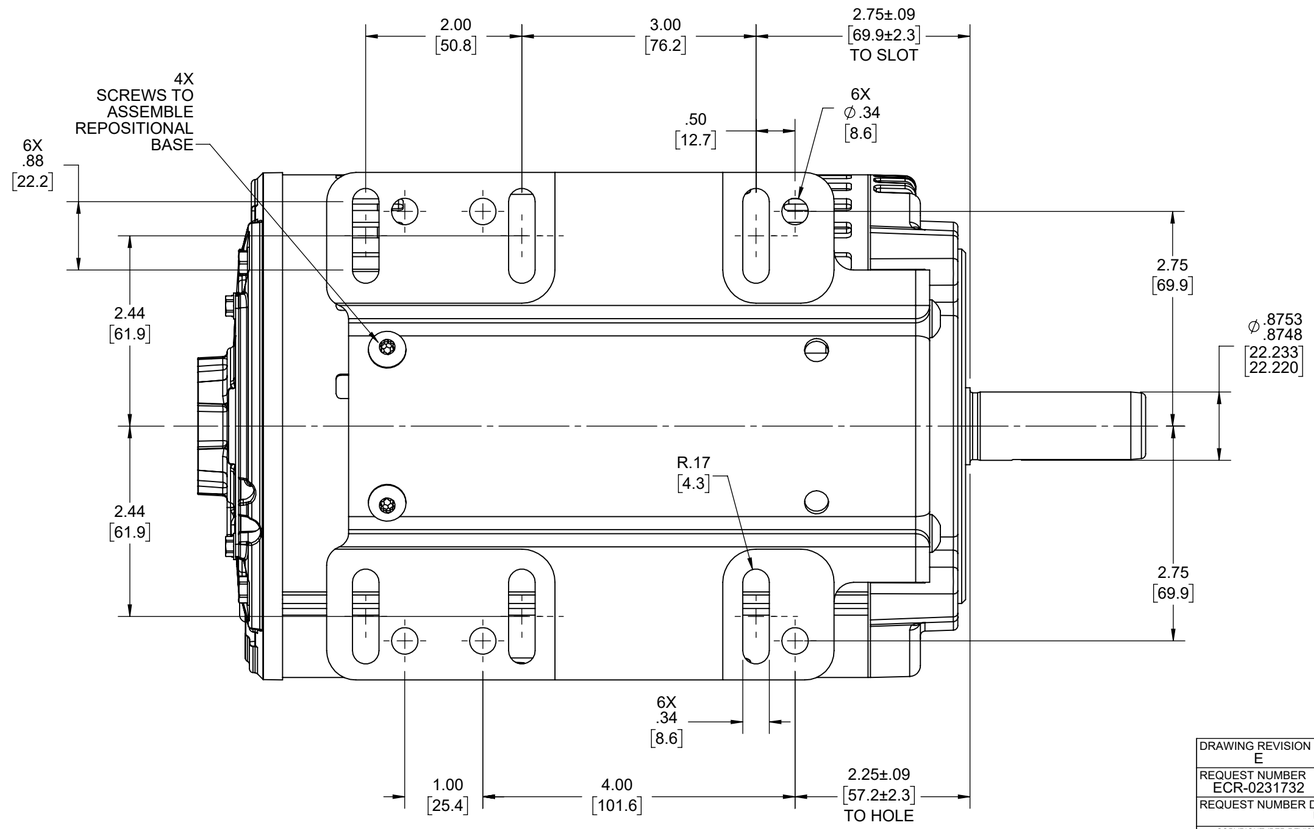

NOTES:

1) REPOSITIONAL BASE CAN BE
REPOSITIONED TO 9:00 OR 3:00 FACING SHAFT
END OF MOTOR FOR NEMA F-1 OR F-2 CONDUIT BOX LOCATION.

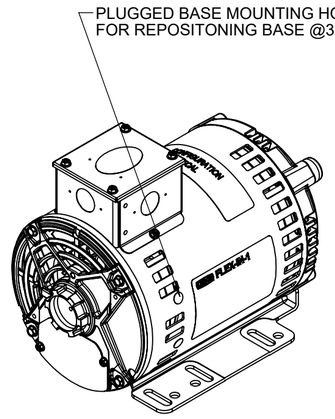

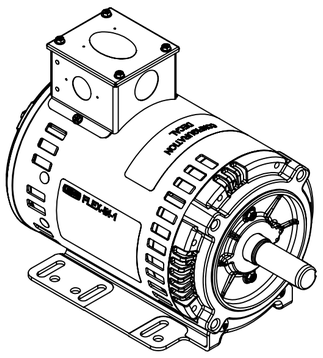

DRAWING REVISION: E	REVISION BY: M.P	REV DATE/© DATE: 02/28/2024	TOLERANCES (EXCEPT AS NOTED):				DRAWN BY: PS
REQUEST NUMBER: ECR-0231732	APPROVED BY: PVR	DATE: 02/28/2024	DEC.	INCH	mm	ANGLE	DATE: 05/17/2023
REQUEST NUMBER DESCRIPTION: UPDATED AS PER ECR			.X	±0.1	[±3]	±0.5°	APPROVED BY: SN
			.XX	±0.02	[±0.5]		DATE: 05/17/2023
			.XXX	±0.005	[±0.13]		REFERENCE: OL56100881-XXX
			.XXXX	±0.0005	[±0.013]		THIRD ANGLE PROJECTION

REMOVE BURRS & BREAK SHARP
EDGES: .003/.015 [.08/.38] X 45°
CORNER FILLETS: R.02 [.5]
MACHINED SURFACES: 125 INCH / 3.2 mm
mm DIMENSIONS IN [BRACKETS]
ARE FOR REFERENCE ONLY

COPYRIGHT (PER REVISION DATE) REGAL BELOIT AMERICA, INC. ALL RIGHTS RESERVED. PROPRIETARY AND CONFIDENTIAL INFORMATION - THIS DOCUMENT IS THE PROPERTY OF REGAL BELOIT AMERICA, INC. ("OWNER") AND CONTAINS OWNER'S PROPRIETARY INFORMATION. ANY PERSON, CORPORATION OR OTHER FIRM RECEIVING IT IS DEEMED, BY RECEIVING IT, TO AGREE THAT IT, AND/OR ANY PART OF IT, SHALL NOT BE DISCLOSED TO ANY PERSON, CORPORATION OR OTHER ENTITY, DUPLICATED, AND/OR USED, EXCEPT AS EXPRESSLY APPROVED IN WRITING IN ADVANCE BY OWNER. THIS DOCUMENT SHALL BE RETURNED TO OWNER UPON REQUEST. IT MAY BE SUBJECT TO CERTAIN RESTRICTIONS UNDER APPLICABLE EXPORT CONTROL LAWS AND REGULATIONS.

Regal Rexnord — Regal Beloit America, Inc.

DESCRIPTION: OUTLINE
56-140FR, BOLT-ON

MATERIAL | PROCESS/FINISH

SIZE	DRAWING NUMBER	SHEET
C	OL56100882-001	3 OF3

Uncontrolled Copy

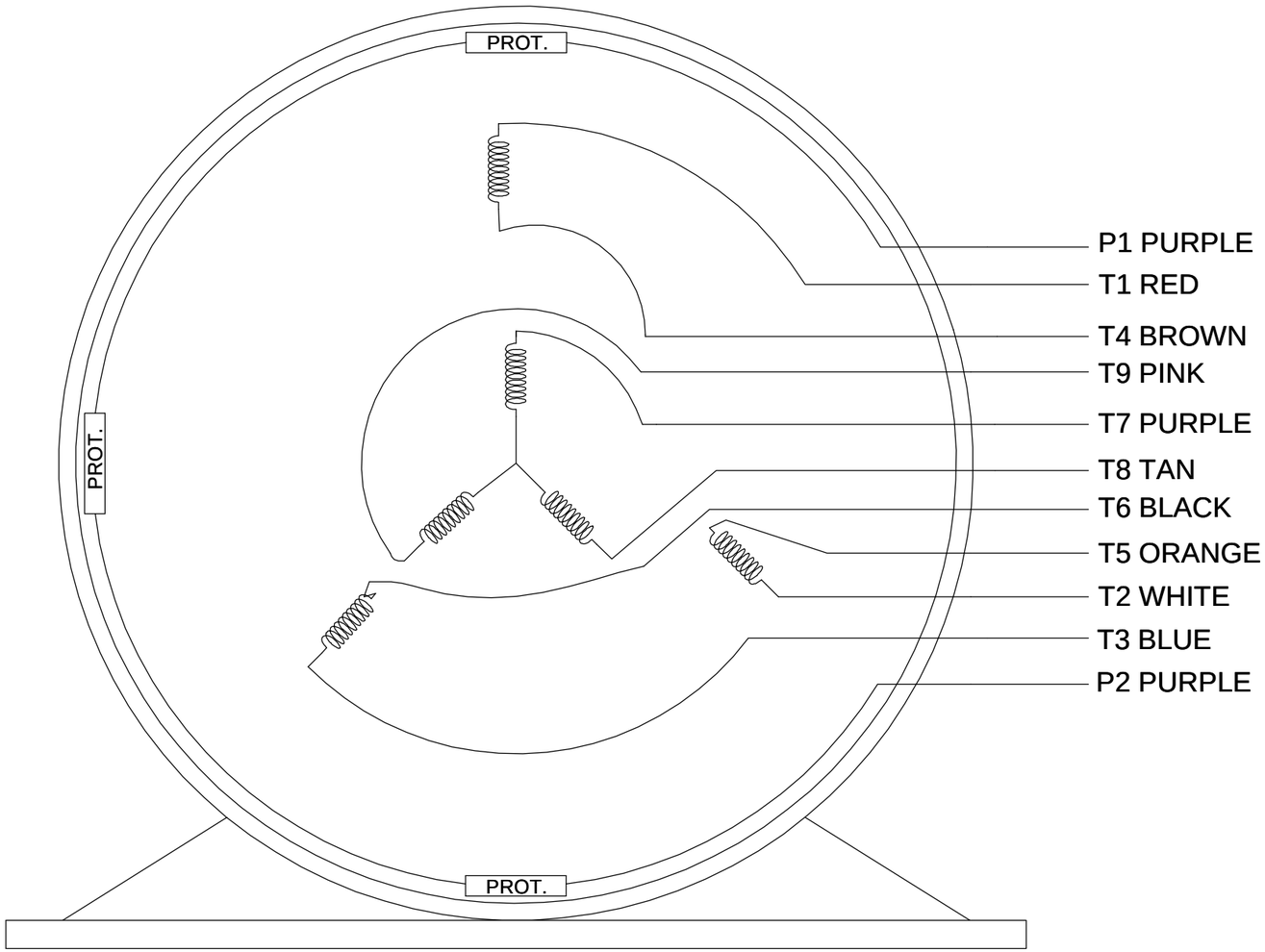

VIEW OF TERMINAL END

NOTES:

1. TO REVERSE ROTATION, INTERCHANGE ANY TWO LINE CONNECTIONS TO L1, L2, OR L3.
2. CONNECTION DIAGRAM-NAMEPLATE DD10042-002.

CCW LOW VOLTAGE

001

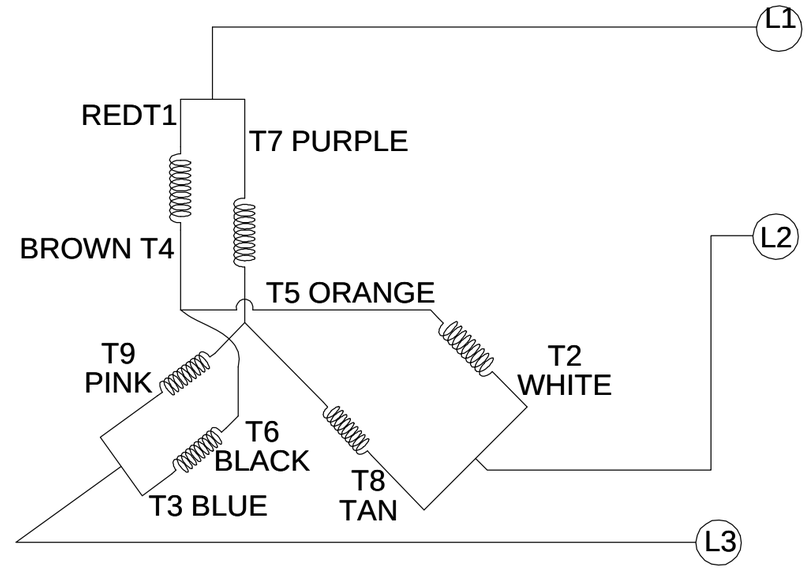

CCW HIGH VOLTAGE

002

DRAWING REVISION: D	REVISION BY: KHADHAR	DATE: 12/05/2018
ECO: ECO-0157853	APPROVED BY: CD	DATE: 12/05/2018
ECO DESCRIPTION: UPDATED CONNECTION DIAGRAM NAMEPLATE NUM.		

COPYRIGHT REGAL BELOIT AMERICA, INC. ALL RIGHTS RESERVED.
PROPRIETARY AND CONFIDENTIAL INFORMATION - THIS DOCUMENT IS THE PROPERTY OF REGAL BELOIT AMERICA, INC. ("OWNER") AND CONTAINS OWNER'S PROPRIETARY INFORMATION. ANY PERSON, CORPORATION OR OTHER FIRM RECEIVING IT IS DEEMED, BY RECEIVING IT, TO AGREE THAT IT, AND/OR ANY PART OF IT, SHALL NOT BE DISCLOSED TO ANY PERSON, CORPORATION OR OTHER ENTITY, DUPLICATED, AND/OR USED, EXCEPT AS EXPRESSLY APPROVED IN WRITING IN ADVANCE BY OWNER. THIS DOCUMENT SHALL BE RETURNED TO OWNER UPON REQUEST. IT MAY BE SUBJECT TO CERTAIN RESTRICTIONS UNDER APPLICABLE EXPORT CONTROL LAWS AND REGULATIONS.

TOLERANCES UNLESS OTHERWISE SPECIFIED:

DEC.	INCH	mm	ANGLE
.X	±0.1	[±2.5]	±0.5°
.XX	±0.01	[±0.25]	
XXX	±0.005	[±0.127]	
.XXXX	±0.0005	[±0.0127]	

REMOVE BURRS & BREAK SHARP EDGES: .003/.015 [.076/.381]
CORNER FILLETS: .02 [.51]
MACHINED SURFACES: 125 INCH / 3.2 mm
mm SHOWN IN [BRACKETS]

DRAWN BY: G. RODRIGUEZ	Regal Beloit America, Inc.
DATE: 25-01-2016	
APPROVED BY: E.VILLA	DESCRIPTION: CONN DIAGRAM-EXTERNAL
DATE: 25-01-2016	
REFERENCE: EE7308T	MATERIAL / PROCESS/FINISH
THIRD ANGLE PROJECTION	SIZE: B / DRAWING NUMBER: CDTD113 / SHEET: 1 OF 1

EC Declaration of Conformity

The undersigned representing
the manufacturer:

Regal Beloit America
1946 West Cook Road
Fort Wayne, IN 46818

and the authorized representative
established within the Community:

Regal Beloit Italy
Via Modena, 18
24040 Ciserano(BG) - Italy

are committed to providing customers with products that comply with applicable regulations and international protocols to which they are subject, including the requirements of the European Parliament Directive on the Harmonization of the laws relating to electrical equipment designed for use within certain voltage limits (2014/35/EU).

Regal Beloit America declares that the following product(s), to which this declaration relates, are in conformity with the relevant sections of the EC standards listed below.

This statement supersedes any statements previously issued pertaining to the product(s) listed below and is subject to change without notice.

Model No : 145TTDR14090

(Model No. may contain prefix and/or suffix characters)

Catalog No : FX34BB007

Rework No : N/A

Directives :

Low Voltage Directive 2014/35/EU

Harmonized Standards Used :

EN 60034-1: 2010 (IEC 60034-1: 2010)
EN 60034-5: 2001/A1:2007 (IEC 60034-5: 2000/A1:2006)

Authorized Representative:

Zach Stauffer
Vice President, Engineering

Authorized Representative in the Community:

Stefano Casiraghi
Technology Director, Engineering

Created on 07/08/2025

CE 25