ABB BALDOR RELIANCE

Customer information packet

ECS101T4H5EF4

5HP, 1800RPM, 3PH, 60HZ, 184T, TEFC, TOP
Class - None
Division - Not Applicable

Copyright © All product information within this document is subject to ABB Motors and Mechanical Inc. copyright © protection, unless otherwise noted.
11/5/2026 1:08:15 PM

Specifications

Enclosure	TEFC
Frame	184T
Frame Material	Steel
Frequency	60.00 Hz
Haz Area Class and Group	None
Haz Area Division	Not Applicable
Motor Letter Type	Three Phase
Output @ Frequency	5.000 HP @ 60 HZ
Phase	3
Synchronous Speed @ Frequency	1800 RPM @ 60 HZ
Voltage @ Frequency	460.0 V @ 60 HZ
Agency Approvals	UL
	WEEE
Ambient Temperature	40 °C
Auxiliary Box	NO AUXILLARY BOX
Auxiliary Box Lead Termination	None
Base Indicator	Rigid
Bearing Grease Type	Polyrex EM (-20F +300F)
Blower	None
Constant Torque Speed Range	6
Current @ Voltage	5.300 A @ 460.0 V
Drip Cover	No Drip Cover
Duty Rating	CONT
Efficiency @ 100% Load	93.7 %
Electrically Isolated Bearing	Not Electrically Isolated
Feedback Device	NO FEEDBACK
Heater Indicator	No Heater
High Voltage Full Load Amps	5.3 a
Insulation Class	F
Inverter Code	Inverter Duty
IP Rating	NONE
Lifting Lugs	Standard Lifting Lugs

Part Detail

Revision	M
Type	AC
Mech. spec.	
Base	
Status	PRD/A
Elec. spec.	36WGA0022
Layout	36LYT258
Eff. date	06-16-2025
CD Diagram	CD0006B03
Poles	04
Leads	3#12 19" LONG LEADS
Proprietary	False
Created date	07-14-2020

Locked Bearing Indicator	No Locked Bearing
Motor Lead Termination	Flying Leads
Motor Standards	NEMA
Motor Type	3632B
Mounting Arrangement	F1
Number of Poles	4
Overall Length	16.71 IN
Power Factor	97
Product Family	General Purpose
Pulley Face Code	Standard
Rodent Screen	None
Service Factor	1.00
Shaft Diameter	1.125 IN
Shaft Ground Indicator	Shaft Grounding
Shaft Rotation	Reversible
Speed	1800 rpm
Speed Code	Single Speed
Starting Method	Direct on line
Thermal Device - Bearing	None
Thermal Device - Winding	None
Vibration Sensor Indicator	No Vibration Sensor
Winding Thermal 1	None
Winding Thermal 2	None

BALDOR·RELIANCE

EC-Titanium™

CAT. NO.	ECS101T4H5EF4							
SPEC.	36-0000-0377					YR	***	
FRAME	184T		ENCL.	TEFC		IP	54	
HP	5	RATING	40C AMB-CONT					
NOM. EFF.	93.7		PF	97		SF	1.0	
VOLTS	460			FLA	5.3			
RPM	1800		RPM MAX	4000				
HZ	60		PH.	3	CLASS	F		
BEMF (V)	252		Rs (Ω)	3.30				
Ld (mH)	54.0		Lq (mH)	191.0				
INV TYP	VPWM	CHP	60 TO 133 HZ					
	CT	6 TO 60 HZ	VT	1 TO 133 HZ				
MATCHED INV	ECIN4A5P8							
BEARING	DE	6206	ODE	6205				
SERIAL#	***							

ELECTRONICALLY PROTECTED MOTOR
FOR INDUSTRIAL USE

FERRITE ASSISTED
SYNCHRONOUS RELUCTANCE MOTOR
FOR INVERTER USE ONLY

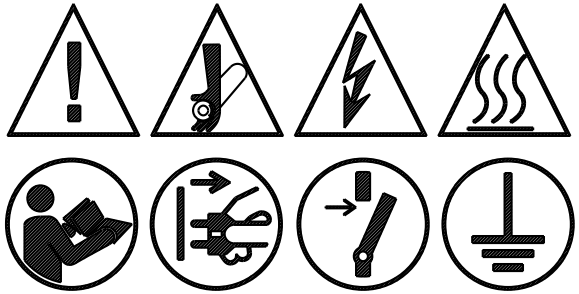

PERMANENT MAGNET MOTOR. WHEN SHAFT IS ROTATED, VOLTAGE WILL BE GENERATED AT THE MOTOR TERMINALS.
MOTEUR Á AIMANT PERMANENT. LORSQUE L'ARBRE TOURNE, UNE TENSION SERA GÉNÉRÉE AUX BORNES DU MOTEUR.

BALDOR-RELIANCE
SHAFT GROUNDING BRUSH INSTALLED

c UL us LISTED
E46145

ABB MOTORS AND MECHANICAL INC.
5711 R.S. BOREHAM JR. ST., FORT SMITH, AR. MFG IN U.S.A.

BALDOR • RELIANCE

EC-Titanium™

PART NO.	EC IN4A5P8				
U1	480	PH	3	HZ	60
I1 MAX	7.1	W/EXT. CHOKE			6.0
SERIAL #	***				



POWER DOWN FOR
5 MINUTES BEFORE
REMOVING COVER

METTRE HORS TENSION
PENDANT 5 MINUTES
AVANT DE RETIRER LE
COUVERCLE

ABB MOTORS AND MECHANICAL
INC. FORT SMITH, AR.
MFG. IN U.S.A.

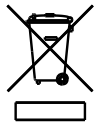

36LYT258

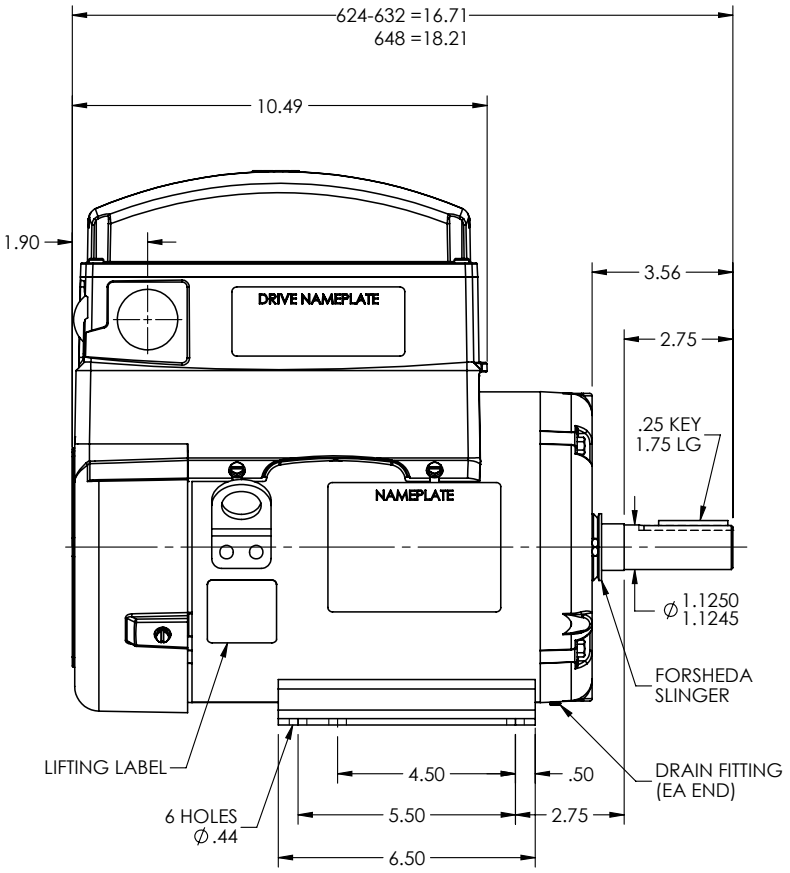

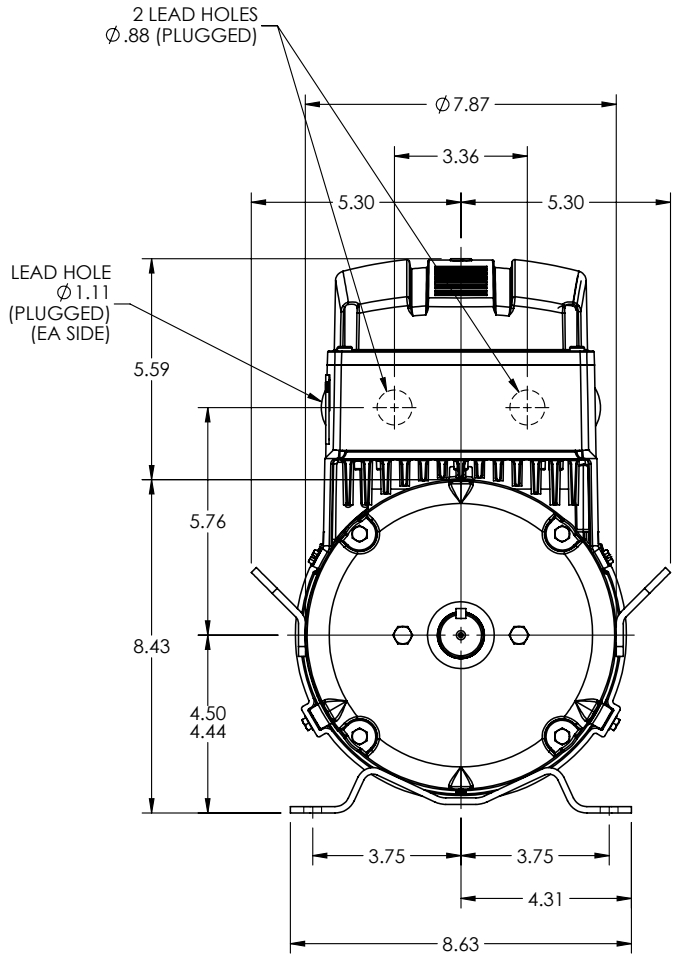

REV. DESC: UPDATE DRAWING GRAPHICS			
REV: F	VERSION: 06	REVISED: 01:15:51 03/15/2022	TDR: 000001187699
	MODEL NO. 36LYT258		REF: -
	BY: ENJEFD0	Material: -	

BALDOR

HORZ 182-4T TEFC B TOP MOUNT DRV INT SH GND ECS

36LYT258

36CB3503A00

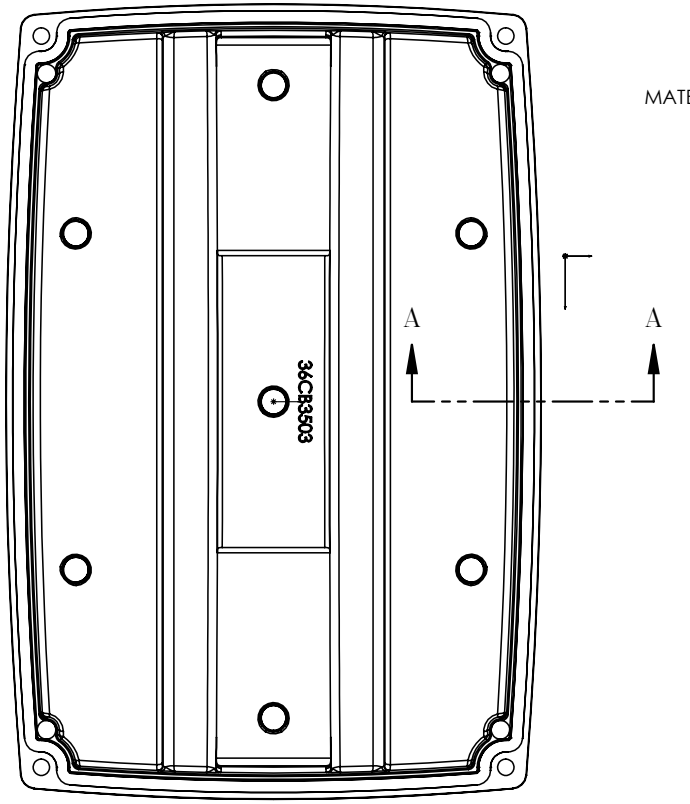

MATERIAL: RAMPF, RAKU-PUR 32-3280-51L

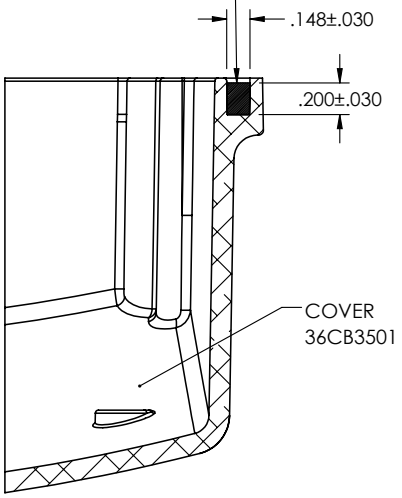

SECTION A–A

36CB3503A00

REV. DESC: NEW			
REV: -	VERSION: 00	REVISED: 09:13:16 01/15/2020	TDR: 000001129989
	MODEL NO. 36CB3503A00		REF: -
	BY: ENMARS0	Material: -	

BALDOR - RELIANCE®

36 & 37 FRAME TOP ECM ALUMINUM COVER WITH FOAM SEAL

36CB3503A00

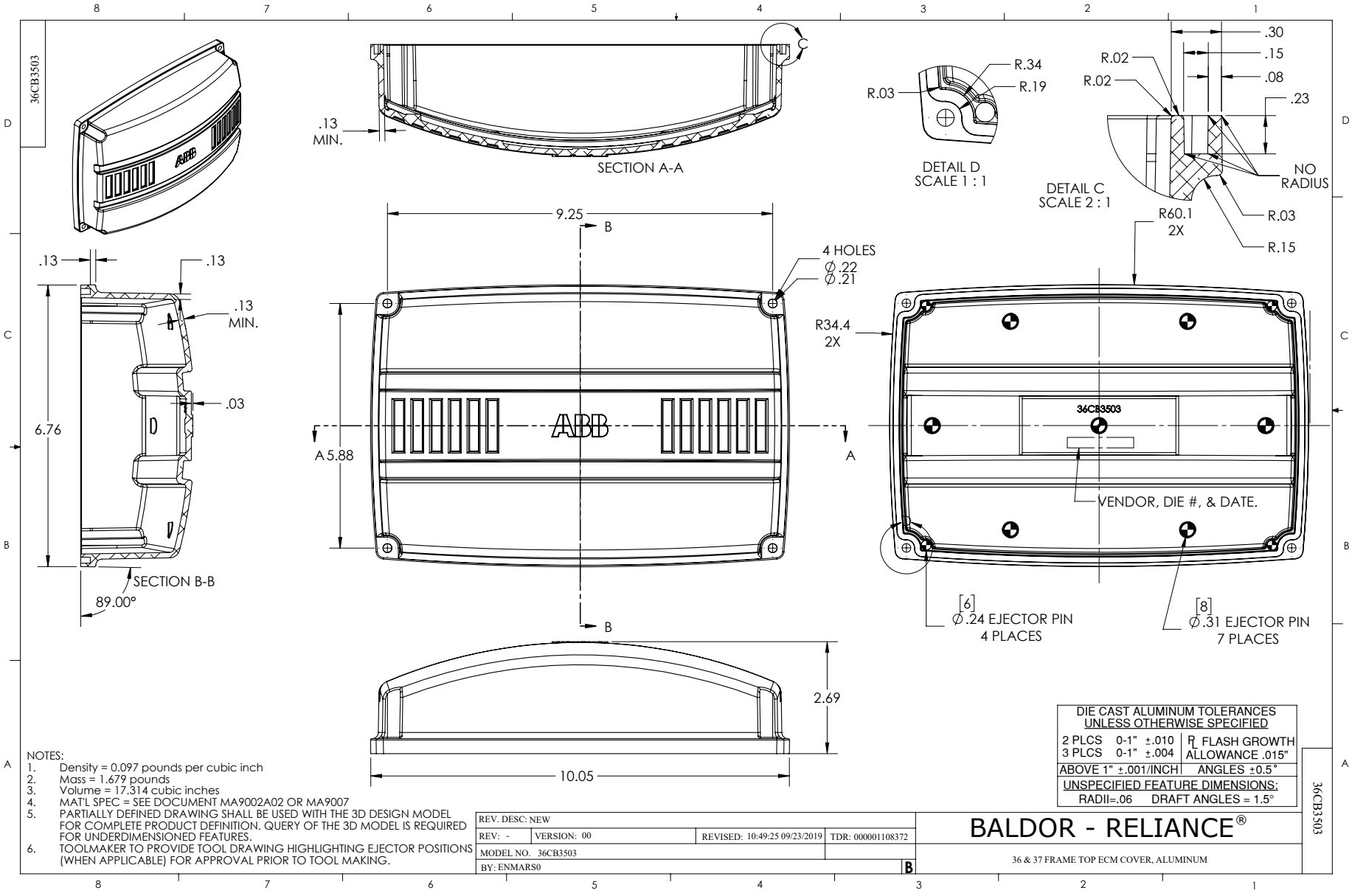

NOTES:
1. Density = 0.097 pounds per cubic inch
2. Mass = 1.679 pounds
3. Volume = 17.314 cubic inches
4. MAT'L SPEC = SEE DOCUMENT MA9002A02 OR MA9007
5. PARTIALLY DEFINED DRAWING SHALL BE USED WITH THE 3D DESIGN MODEL FOR COMPLETE PRODUCT DEFINITION. QUERY OF THE 3D MODEL IS REQUIRED FOR UNDERDIMENSIONED FEATURES.
6. TOOLMAKER TO PROVIDE TOOL DRAWING HIGHLIGHTING EJECTOR POSITIONS (WHEN APPLICABLE) FOR APPROVAL PRIOR TO TOOL MAKING.

DIE CAST ALUMINUM TOLERANCES UNLESS OTHERWISE SPECIFIED	
2 PLCS 0-1" ±.010 3 PLCS 0-1" ±.004	R FLASH GROWTH ALLOWANCE .015"
ABOVE 1" ±.001/INCH	ANGLES ±0.5°
UNSPECIFIED FEATURE DIMENSIONS: RADII=.06 DRAFT ANGLES = 1.5°	

REV. DESC: NEW			
REV: -	VERSION: 00	REVISED: 10:49:25 09/23/2019	TDR: 000001108372
MODEL NO. 36CB3503			
BY: ENMARS0			B

BALDOR - RELIANCE®

36 & 37 FRAME TOP ECM COVER, ALUMINUM

36CB3503

CD0006

TYPICAL WYE–CONNECTED MOTOR

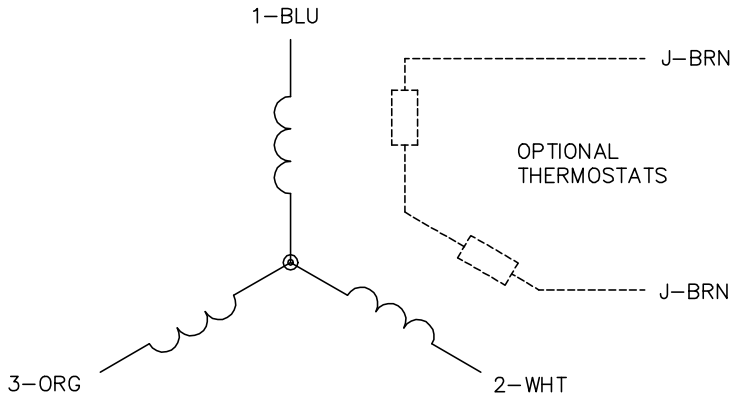

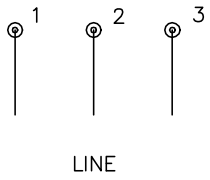

TYPICAL DELTA–CONNECTED MOTOR

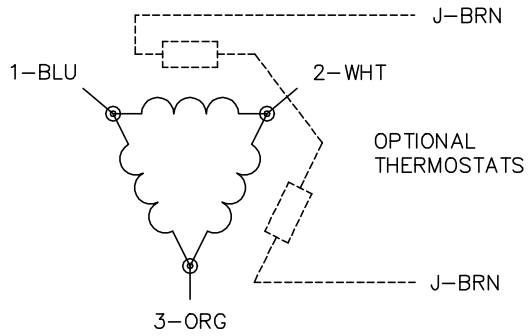

NOTES:

1. THREE LEAD MOTOR MAY BE EITHER WYE CONNECTED OR DELTA CONNECTED.
2. INTERCHANGE ANY TWO LINE LEADS TO REVERSE ROTATION.
3. OPTIONAL THERMOSTATS ARE PROVIDED WHEN SPECIFIED.
4. ACTUAL NUMBER OF INTERNAL PARALLEL CIRCUITS MAY VARY.
5. LEAD COLORS ARE OPTIONAL. LEADS MUST BE NUMBERED AS SHOWN.

CD0006

REV. DESC: ADD CLASS CONN00000007			BALDOR - RELIANCE®
REV. LTR: E	VERSION: 01	TDR: 000001099922	
FILE: \AAA\00005\141	REVISED: 10:24:49 02/19/2019	BY: ENBRIR0	3PH, SV, 3 LEADS, WYE OR DELTA CONNECTED
MTL: –			SH 1 of 1

CD0006B03

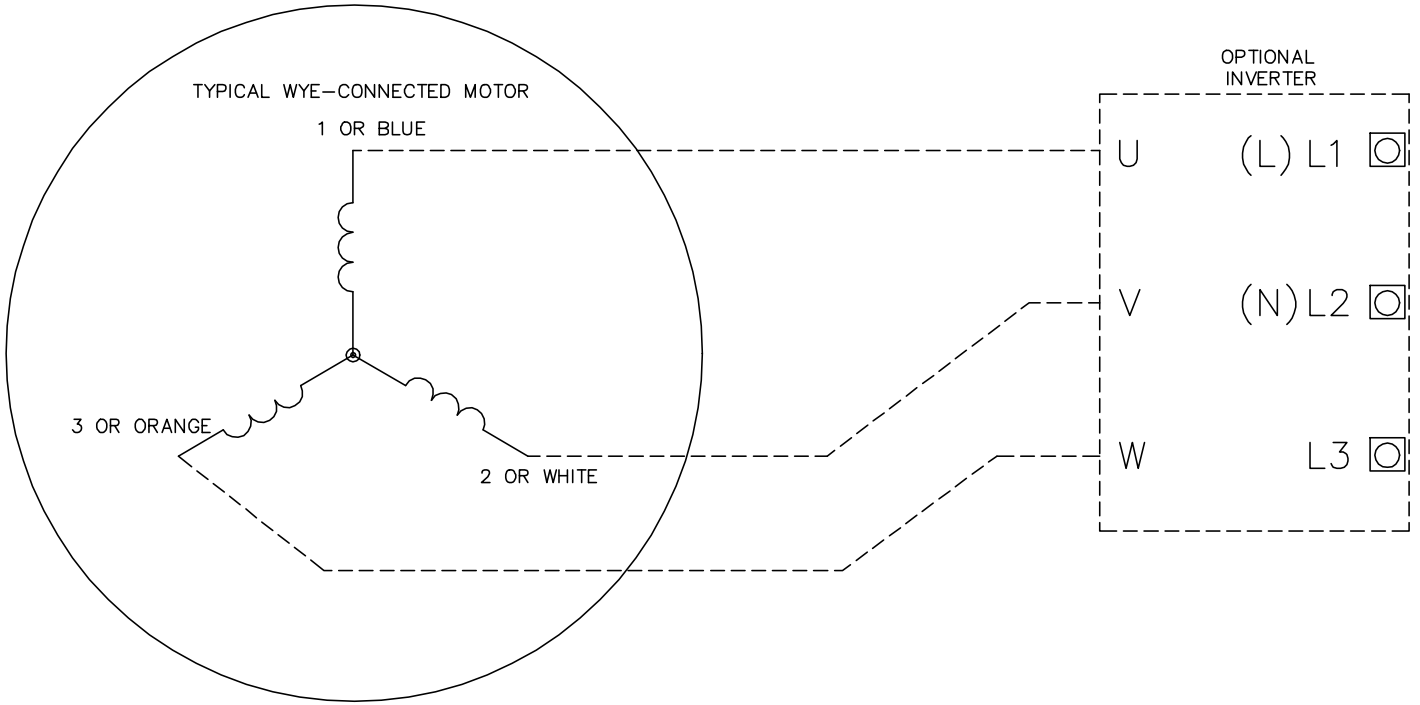

NOTES:

1. INTERCHANGE ANY TWO LINE LEADS TO REVERSE ROTATION.
2. ACTUAL NUMBER OF INTERNAL PARALLEL CIRCUITS MAY VARY.

CD0006B03

REV. DESC: CHANGE LEAD COLORS TO BLUE WHITE ORANGE		
REV. LTR: A	VERSION: 01	TDR: 000001158598
FILE: \AAA\00252\917	REVISED: 11:01:03 01/19/2021	BY: ENMARSO
MTL: –		

BALDOR - RELIANCE®

3PH, SV, 3 LEADS, WYE CONNECTED, ECS

SH 1 of 1