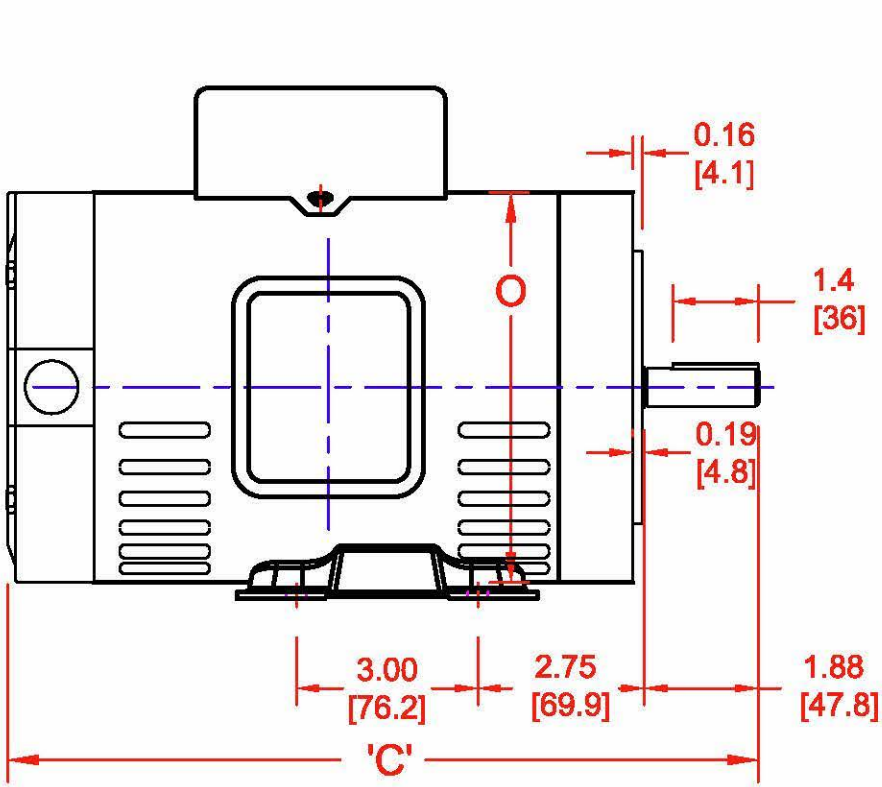

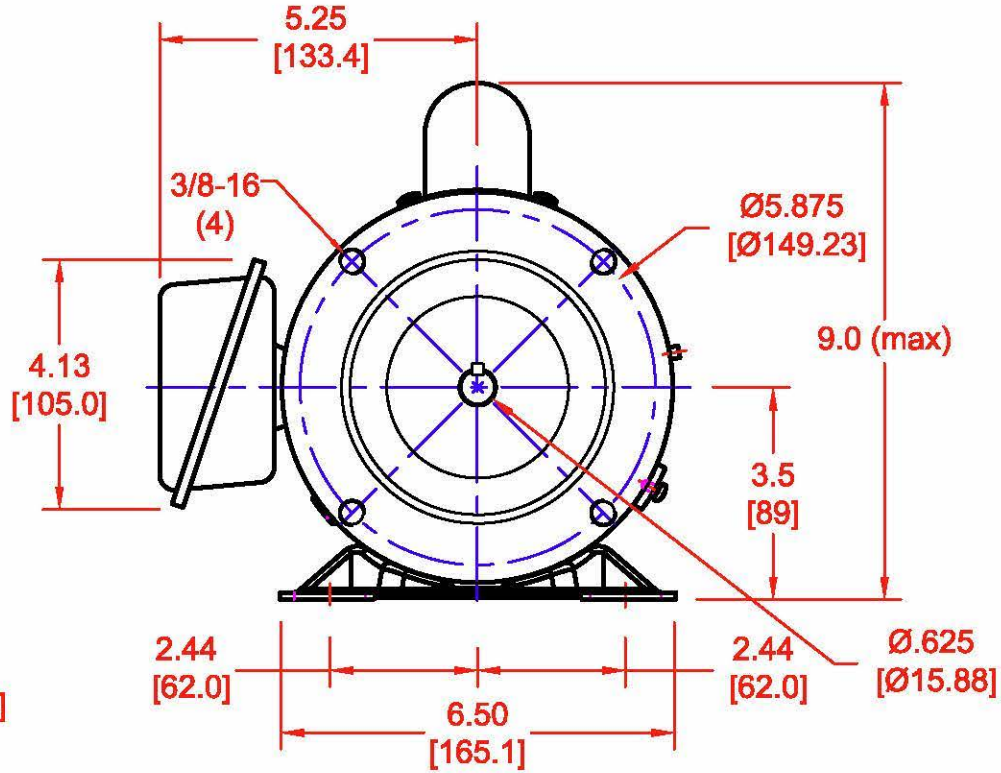

Item #	HP	RPM	Voltage	Frame	Encl	O (max)	C (max)	F.L Amps	S. F.	Weight
MA0505C	1/2	1725	115/208-230	56C	TEFC	6.5	11.6	8.8/4.4	1.15	24

DIMENSIONS
For AC motors, single phase, 56C TEFC

All motors come with 56C face and removable base dual mounting

Part No.	HP	'O' (Max)	'C' (Max)
MA0505C	1/2	6.5"	11.6"

UNLESS OTHERWISE SPECIFIED
ALL DIMENSIONS ARE IN INCHES
INTERPRET DIM AND TOL PER ASME Y14.5M – 1994
TOLERANCES:
DECIMALS .XX ±.010 .XXX ±.005 .XXXX ±.0005
FRACTIONAL ± 1/32
ANGULAR ± 30'
BREAK ALL EDGES
ALL HOLES CHAMFERED .01x45°
SURFACE ROUGHNESS: 125 µIN BEFORE PLATING
THIRD ANGLE PROJECTION

THIS DRAWING AND THE INFORMATION ON IT ARE THE PROPERTY OF HALLMARK INDUSTRIES, INC. AND IS NOT TO BE USED OR DUPLICATED WITHOUT PRIOR AUTHORIZATION

HALLMARK INDUSTRIES, INC.
420 ESTES AVE, SCHAUMBURG, IL 60193 PHONE: (847)351-9050 FAX: (847)351-9051

TITLE: OUTLINE, AC MOTOR, MA05
SINGLE PHASE 56C ODP

DRAWN | DRAWN DATE | CHECKED | CHECK DATE

SIZE B | DWG NO. MA05 | REV –

SCALE 1:2 | ALT. NO. | SHEET 1 OF 1