CONTACT US @ *855-355-2724*
E-Mail: Sales@brahelectric.com
www.Brahelectric.com

PRODUCT DATA SHEET

PART NUMBER – B3TF5122-0AP6: BRAH Electric, aftermarket direct replacement contactors for Siemens 3TF5122-0AP6, World Series, type 3TF, 3P, 3PH, 140A, 600V, 60HP @ 230V, 100HP @ 460V, 150HP @ 575V, complete with 240V AC coil, 2 N/O - 2 N/C auxiliary contact, AC magnetic contactor, suitable for use with 3TF series motor control systems

MAGNETIC CONTACTOR
PART NO. B3TF5122-0AP6

Voltage Selection Chart
B3TF51XXXX

B3TF51	110/120V AC
B3TF5122	110/120V AC
B3TF5122-0AC2	24V AC
B3TF5122-0AK6	110/120V AC
B3TF5122-0AP6	240V AC
B3TF5122-0AV0	480V AC

PRODUCT SPECIFICATIONS

TYPE	*VALUE (UNITS)*	*NOTES*	*COMMENTS*
PHASE	3		
POLES	3		
VOLTAGE	600 (VAC)		
AMPERAGE	140 (A)		
COIL VOLTAGE MIN	240 (V)		
COIL VOLTAGE MAX	240 (V)		
MIN HP. RATING	60 (HP)	@ 230V	
MAX HP RATING	150 (HP)	@ 575V	

Warranty: All Products sold by BRAH Electric are guaranteed to be free of defect for a period of one year, under the condition that the product has been installed and operated properly. All items proven defective within the one year period will be replaced by BRAH Electric. In the event that we cannot provide a direct replacement, your monies will be refunded in full. We are not responsible for any consequential losses or damages outside of the defective product as well as any replacements or repairs performed by another party without our written authorization from BRAH Electric.

REVISIONS				
ZONE	REV.	DESCRIPTION	DATE	APPROVED

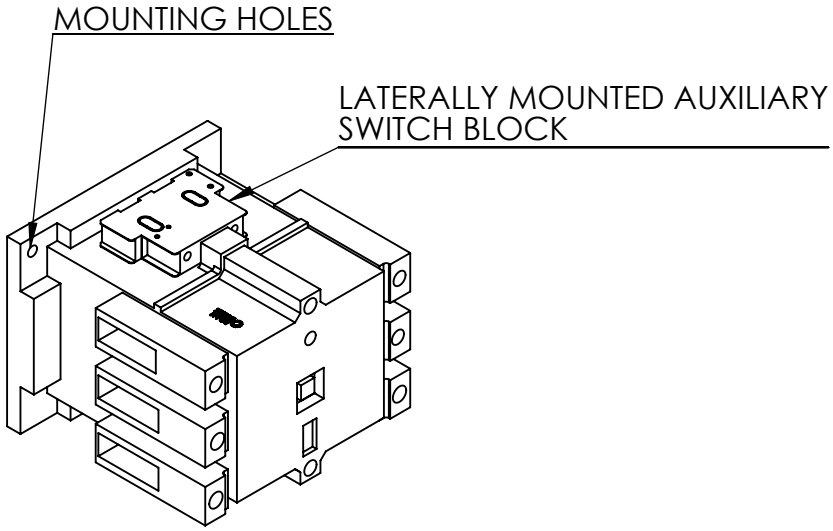

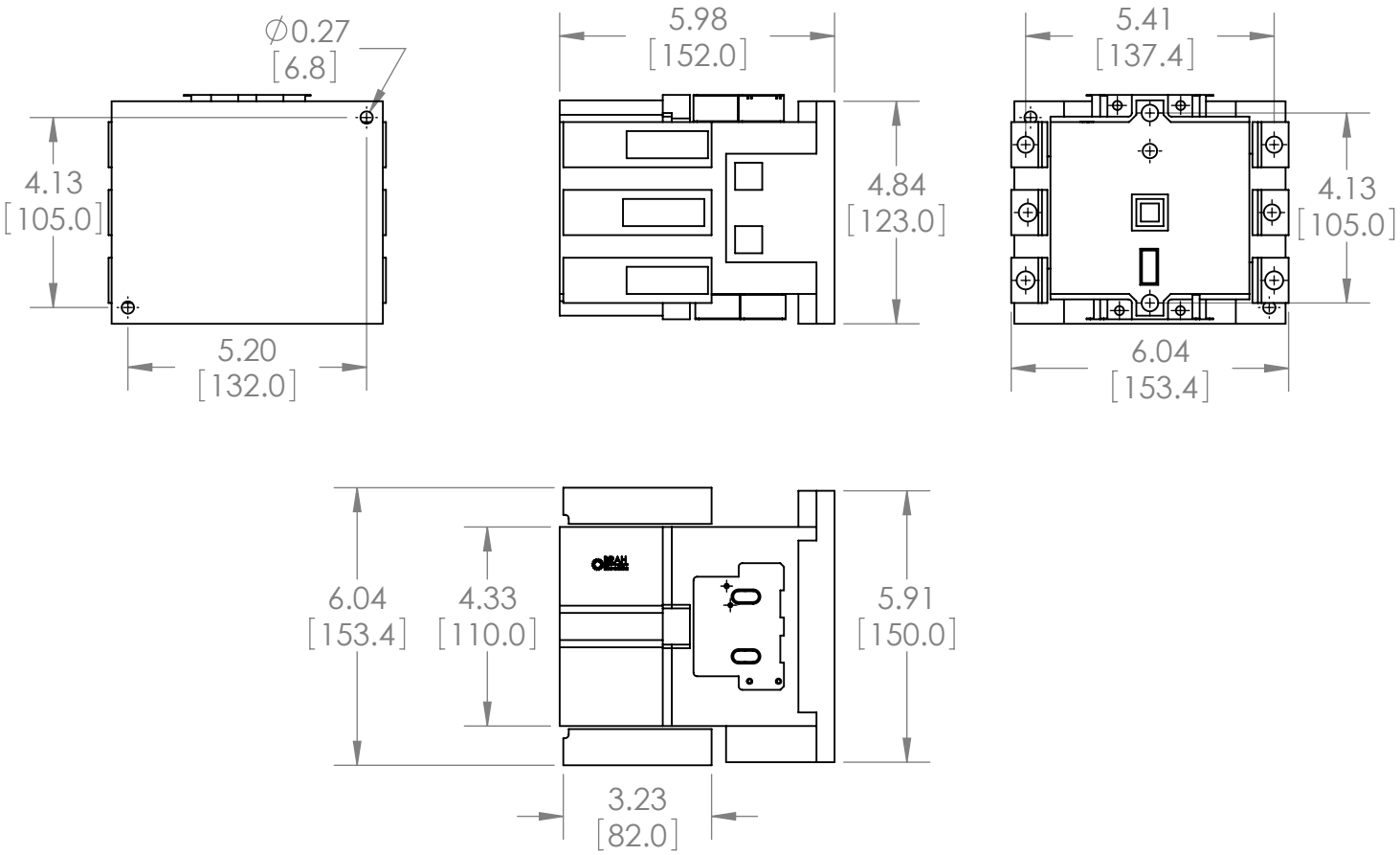

WWW.BRAHELECTRIC.COM , 855-355-2724

*NOTE: BRAH ELECTRIC CONTACTOR B3TF5122-0AP6 IS AN AFTERMARKET DIRECT REPLACMENT FOR 3TF5122-0AP6,3TF SERIES. SUITABLE FOR USE WITH 3TF SERIES MOTOR CONTROL SYSTEMS

THIRD ANGLE PROJECTION

PROPRIETARY AND CONFIDENTIAL

THE INFORMATION CONTAINED IN THIS DRAWING IS THE SOLE PROPERTY OF BRAH ELECTRIC. ANY REPRODUCTION IN PART OR AS A WHOLE WITHOUT THE WRITTEN PERMISSION OF BRAH ELECTRIC IS PROHIBITED.

UNLESS OTHERWISE NOTED

ALL DIMENSIONS ARE IN INCHES METRIC UNITS ARE DISPLAYED BENEATH IN [MM.]

MATERIAL: MOLDED PLASTIC CASE

FINISH: N/A

DO NOT SCALE DRAWING

BRAH Electric

MAGNETIC CONTACTOR

SIZE	DWG. NO.	REV.
A	B3TF5122-0AP6	A

SCALE:1:4 | WEIGHT: 3.2 LBS | SHEET 1 OF 1