ABB BALDOR RELIANCE

Customer information packet

EM4316T-5

75HP, 1780RPM, 3PH, 60HZ, 365T, A36070M, TEFC
Class - None
Division - Not Applicable

Copyright © All product information within this document is subject to ABB Motors and Mechanical Inc. copyright © protection, unless otherwise noted.
11/5/2026 5:34:35 PM

Specifications

Enclosure	TEFC
Frame	365T
Frame Material	Iron
Frequency	60.00 Hz
Haz Area Class and Group	None
Haz Area Division	Not Applicable
Motor Letter Type	Three Phase
Output @ Frequency	75.000 HP @ 60 HZ
Phase	3
Synchronous Speed @ Frequency	1800 RPM @ 60 HZ
Voltage @ Frequency	575.0 V @ 60 HZ
Agency Approvals	CCSAUSEEV
	CURUSEEV
	NEMA PREMIUM
	NEMA PREMIUM (OLD LOGO)
Ambient Temperature	40 °C
Auxiliary Box	NO AUXILLARY BOX
Base Indicator	Rigid
Bearing Grease Type	Polyrex EM (-20F +300F)
Current @ Voltage	69.000 A @ 575.0 V
Design Code	B
Drip Cover	No Drip Cover
Duty Rating	CONT
Efficiency @ 100% Load	95.4 %
Enclosure Modification	841
Feedback Device	NO FEEDBACK
Heater Indicator	No Heater
High Voltage Full Load Amps	69.0 a
Insulation Class	F
Inverter Code	Inverter Ready
KVA Code	G
Lifting Lugs	No Lifting Lugs

Part Detail

Revision	X
Type	AC
Mech. spec.	
Base	
Status	PRD/A
Elec. spec.	A36WG4078
Layout	617428-011
Eff. date	09-26-2025
CD Diagram	416820-036
Poles	04
Leads	3#4
Proprietary	False
Created date	10-19-2010

Max Speed	2700 rpm
Motor Lead Quantity/Wire Size	3 @ 4 AWG
Motor Standards	NEMA
Motor Type	A36070M
Mounting Arrangement	F1
Number of Poles	4
Overall Length	33.48 IN
Power Factor	86
Pulley End Bearing Type	Ball
Pulley Face Code	Standard
Service Factor	1.15
Shaft Diameter	2.375 IN
Shaft Ground Indicator	No Shaft Grounding
Shaft Rotation	Reversible
Shaft Slinger Indicator	No Slinger
Speed	1780 rpm
Speed Code	Single Speed
Starting Method	Direct on line
Thermal Device - Bearing	None
Thermal Device - Winding	None

Nameplate

NP3979LUA

CAT #	EM4316T-5	**SER**		**CC**	010A								
SPEC	P36G3428	**RATING**	40C AMB-CONT										
HZ	**VOLTS**	**AMPS**	**RPM**	**HP**	**CODE**	-	**SF**	**DES**	**PF**		**NEMA NOM. EFF**		
60	575	69	1780	75	G		1.15	B	86	%	95.4	%	
										%		%	
PH	3	**CL**	F	**MAX CORR KVAR**	16								
BRG	**DE**	6313	**ODE**	6313	**ENCL**	TEFC	**FR**	365T		54			
GREASE	POLYREX EM						**MTR WT**	907	**LBS**				
USABLE AT	N/A												
INVERTER DUTY	**CT**	15-60	**HZ**	4:1	**VT**	3-60	**HZ**	20:1	**CHP**	60-90	**HZ**	1.5:1	**1.0 SF VPWM**
MAX RPM	2700	SFA 80											

AC induction motor performance data

Record #71925 - Typical performance - not guaranteed values

Winding	A36WG4078
Type	A3670M
Enclosure	TEFC

Nameplate data

Rated Output			75
Volts			575
Full Load Amps			69
R.P.M.			1780
Hz	60	Phase	3
KVA Code			G
S.F.			1.15
NEMA Nom. Eff.	95.4	Power Factor	86
Duty			CONT
S.F. Amps			

575 V, 60 Hz:
Single Voltage Motor

Full Load Torque	220 LB-FT
Start Configuration	direct on line
Breakdown Torque	619 LB-FT
Pull-up Torque	339 LB-FT
Locked-rotor Torque	431 LB-FT
Starting Current	437 A
No-load Current	22.31
Line-line Res. @ 25°C	0.14 Ω
Temp. Rise @ Rated Load	61°C
Temp. Rise @ S.F. Load	77°C
Locked-rotor Power Factor	32.1
Rotor inertia	16.2 lb-ft²

Load Characteristics 575 V, 60 Hz, 75 HP

% of Rated Load	NL	25	50	75	100	125	150	SF
Power Factor	4	54	76	83	86	86	85	86
Efficiency	0	93.7	95.9	95.7	95.4	94.6	93.7	94.8
Speed	1799	1797	1792	1787	1782	1777	1770	1779
Line amperes	22.31	27.39	38.79	53.01	68.52	85.75	105	78.9

SPEED TORQUE / SPEED CURRENT CURVES

BALDOR • RELIANCE

A36WG4078

75HP 575V 60HZ

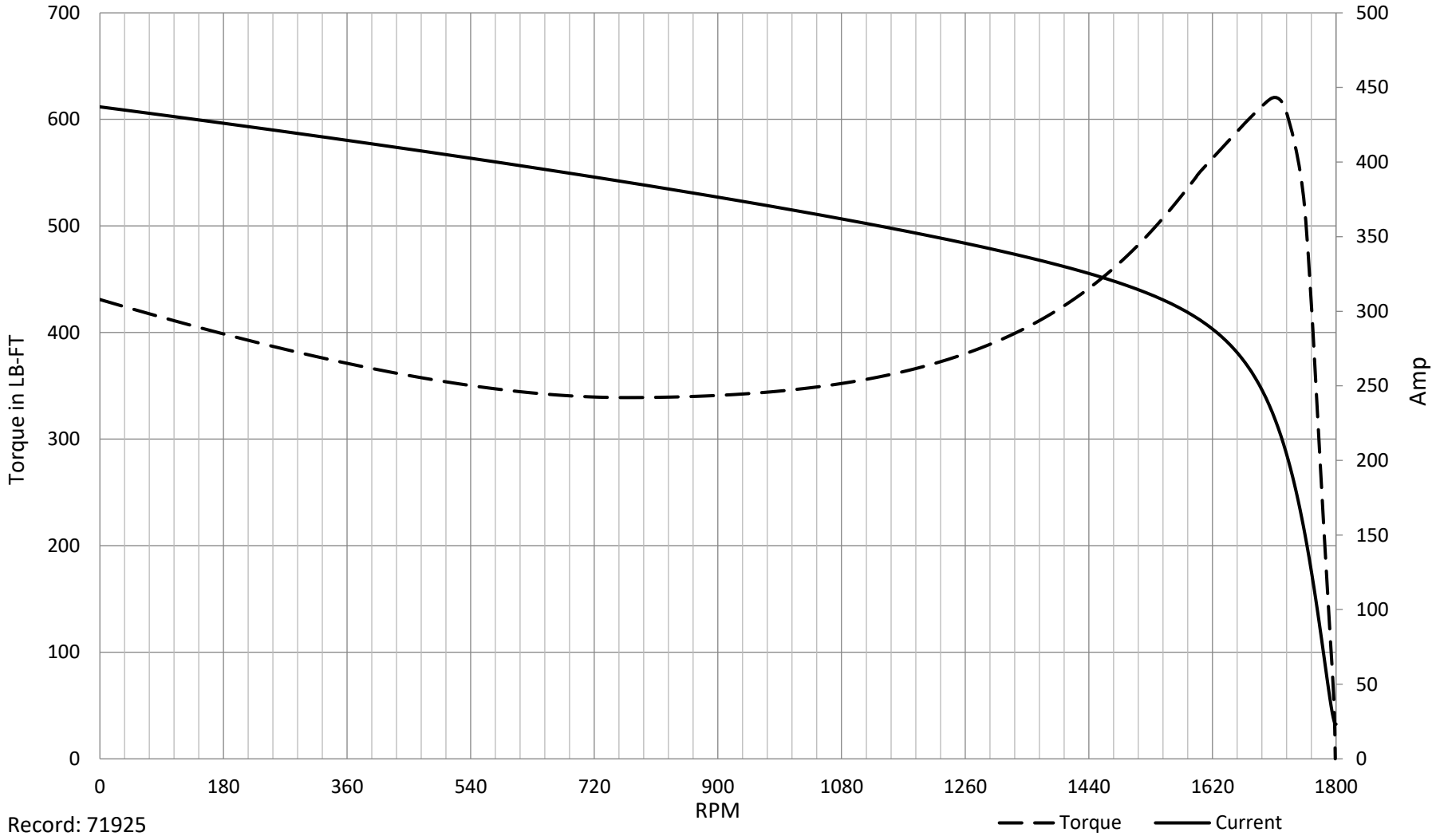

Record: 71925

DUTY MASTER ALTERNATING CURRENT MOTORS

SQUIRREL-CAGE INDUCTION
CAST IRON CONSTRUCTION

617428-011

ENCLOSURE: TOTALLY ENCLOSED
MOUNTING: FOOT

FRAMES 364T-365T

COOLING: FAN COOLED

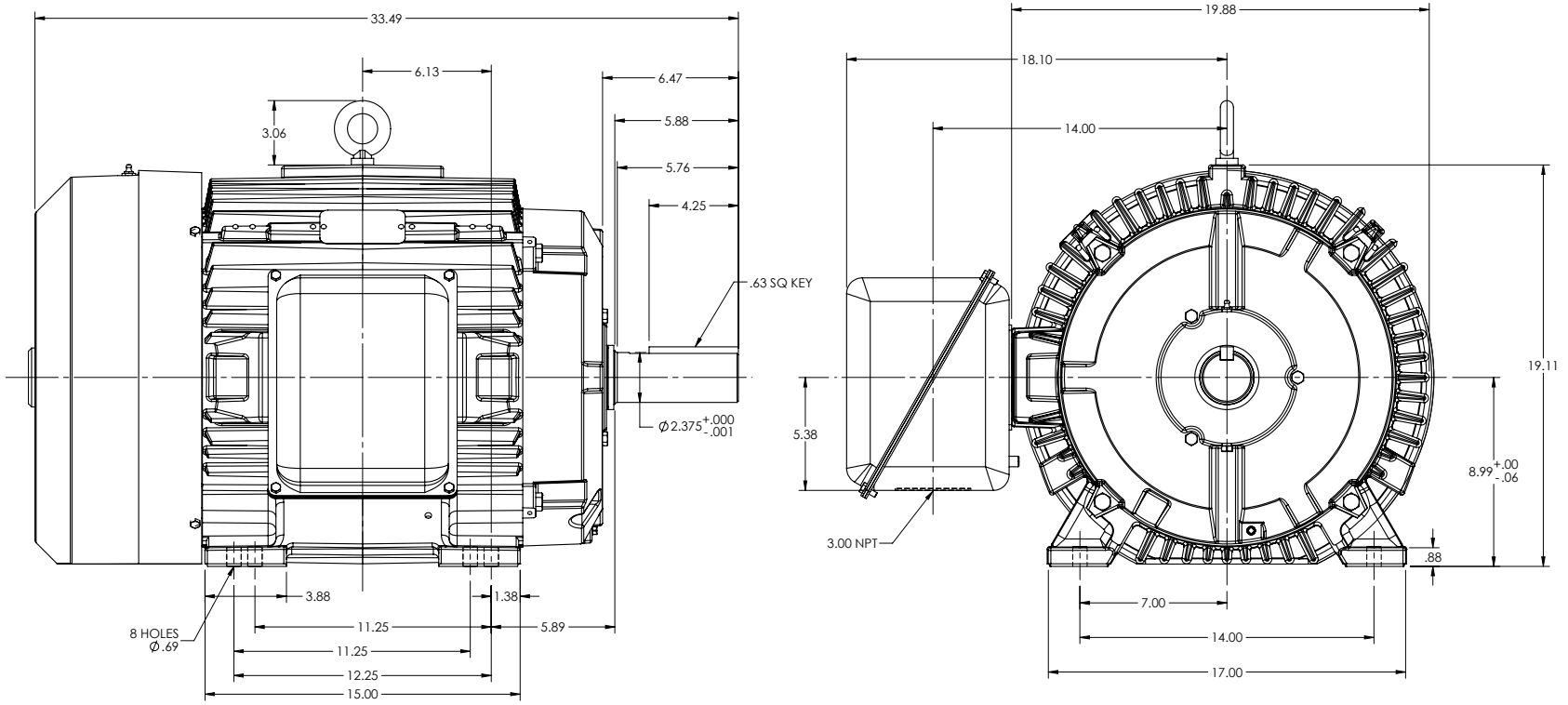

MAXIMUM PERMISSIBLE SHAFT RUNOUT WHEN MEASURED AT END OF STD. SHAFT EXTENSION IS .002 T.I.R. UP TO AND INCLUDING 1.625 DIA. AND .003 T.I.R. 1.625 DIA. TO 5 INCH DIA.

WEIGHT (LBS): 364T = 800
365T = 840

MOTOR WEIGHTS MAY VARY BY 15% DEPENDING UPON RATING.

CUSTOMER IS RESPONSIBLE FOR DETERMINING THAT BALDOR'S PRODUCT WILL PERFORM SUITABLY IN THE INTENDED APPLICATION

REV. DESC: UPDATE MODEL TO ADD EXTERNAL HARDWARE PER PROD MGM			
REV: A	VERSION: 01	REVISED: 04:01:29 09/30/2022	TDR: 000001196512
MODEL NO. 617428-011			REF:
BY: ENFRAJ0			B

BALDOR

DIM SHT TEFC 364-365T FT MTG W/GRSR AND PLUGS

617428-011

416820–036

A–C MOTOR
CONNECTION DIAGRAM
STANDARD 3 LEAD CONNECTED

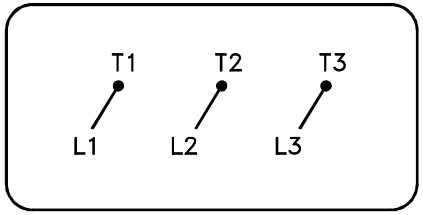

(N.P. 1575–BA)

416820–036

REV. DESC: LOADED TO BUS, C/R 335225			BALDOR
REV. LTR: –	VERSION: 00	TDR: 000000538207	
FILE: \MGA\00000\682		REVISED: 11:54:06 04/30/2010	CONN DIAG – STANDARD 3 LEAD
MTL: –		BY: RAGRA	SH 1 of 1