ABB BALDOR RELIANCE

Customer information packet

VRBM3546

1HP, 1700RPM, 3PH, 60HZ, 56C, 3436M, TENV, F1, B
Class - None
Division - Not Applicable

Copyright © All product information within this document is subject to ABB Motors and Mechanical Inc. copyright © protection, unless otherwise noted.
11/5/2026 6:00:33 PM

Specifications

Enclosure	TENV
Frame	56C
Frame Material	Aluminum
Frequency	60.00 Hz
Haz Area Class and Group	None
Haz Area Division	Not Applicable
Motor Letter Type	Three Phase
Output @ Frequency	1.000 HP @ 60 HZ
Phase	3
Synchronous Speed @ Frequency	1800 RPM @ 60 HZ
Voltage @ Frequency	230.0 V @ 60 HZ
	460.0 V @ 60 HZ
Agency Approvals	UR
	CSA
Ambient Temperature	40 °C
Auxiliary Box	NO AUXILLARY BOX
Auxiliary Box Lead Termination	None
Base Indicator	No Mounting
Bearing Grease Type	Polyrex EM (-20F +300F)
Blower	None
Current @ Voltage	1.600 A @ 460.0 V
	3.200 A @ 230.0 V
Design Code	D
Drip Cover	No Drip Cover
Duty Rating	CONT
Efficiency @ 100% Load	74.0 %
Electrically Isolated Bearing	Not Electrically Isolated
Feedback Device	NO FEEDBACK
Front Face Code	Brake Mounting
Front Shaft Indicator	None
Heater Indicator	No Heater
High Voltage Full Load Amps	1.6 a

Part Detail

Revision	F
Type	AC
Mech. spec.	34K208
Base	
Status	PRD/A
Elec. spec.	34WGR297
Layout	34LYK208
Eff. date	10-28-2024
CD Diagram	CD0005
Poles	04
Leads	9#18
Proprietary	False
Created date	04-17-2015

Insulation Class	F
Inverter Code	Not Inverter
KVA Code	L
Lifting Lugs	No Lifting Lugs
Locked Bearing Indicator	Locked Bearing
Motor Lead Exit	Ko Box
Motor Lead Quantity/Wire Size	9 @ 18 AWG
Motor Lead Termination	Flying Leads
Motor Standards	NEMA
Motor Type	3436M
Mounting Arrangement	F1
Number of Poles	4
Overall Length	15.50 IN
Power Factor	81
Product Family	General Purpose
Pulley End Bearing Type	Ball
Pulley Face Code	C-Face
Pulley Shaft Indicator	Standard
Rodent Screen	None
RoHS Status	ROHS COMPLIANT
Service Factor	1.00
Shaft Diameter	0.625 IN
Shaft Extension Location	Pulley End
Shaft Ground Indicator	No Shaft Grounding
Shaft Rotation	Reversible
Speed	1680 rpm
Speed Code	Single Speed
Starting Method	Direct on line
Thermal Device - Bearing	None
Thermal Device - Winding	None
Vibration Sensor Indicator	No Vibration Sensor
Winding Thermal 1	None
Winding Thermal 2	None

Nameplate

NP1893							
CAT.NO.	VRBM3546						
SPEC.	34K208R297G1						
HP	1						
VOLTS	230/460						
AMPS	3.2/1.6						
RPM	1680						
FRAME	56C	**HZ**	60		**PH**	3	
SER.F.	1.00	**CODE**	L	**DES**	D	**CL**	F
FL EFF	74	**PF**	81				
RATING	40C AMB-CONT						
CC				**USABLE AT 208V**		N/A	
DE	6203	**ODE**	6203				
ENCL	TENV	**SER.**					

AC Induction Motor Performance Data
Record # 55596
Typical performance - not guaranteed values

Winding: 34WGR297-R001	**Type:** 3436M	**Enclosure:** TENV

Nameplate Data			
Rated Output (HP)			1
Volts			230/460
Full Load Amps			3.2/1.6
R.P.M.			1680
Hz	60	**Phase**	3
NEMA Design Code	D	**KVA Code**	L
Service Factor (S.F.)			1
NEMA Nom. Eff.	74	**Power Factor**	81
Rating - Duty			40C AMB-CONT

460 V, 60 Hz: High Voltage Connection	
Full Load Torque	3.15 LB-FT
Start Configuration	direct on line
Breakdown Torque	10.6 LB-FT
Pull-up Torque	9.08 LB-FT
Locked-rotor Torque	12.7 LB-FT
Starting Current	11.4 A
No-load Current	0.902 A
Line-line Res. @ 25ºC	14.869 Ω
Temp. Rise @ Rated Load	100°C

Load Characteristics 460 V, 60 Hz, 1 HP

% of Rated Load	**25**	**50**	**75**	**100**	**125**	**150**
Power Factor	41	61	73	81	85	88
Efficiency	58.6	70.8	74	74.1	72.1	68.6
Speed	1771.5	1744.6	1715.7	1681.5	1642	1590.6
Line amperes	0.946	1.1	1.3	1.56	1.9	2.33

ABB Motors and Mechanical Inc.

WINDING # 34WGR297

1 HP 3 PH 60 HZ 1680 RPM 460 V 3436M

Typical performance - not guaranteed values.

TORQUES(LB-FT): PO=10.6 PU=9.08 LR=12.7 LRA=11.4

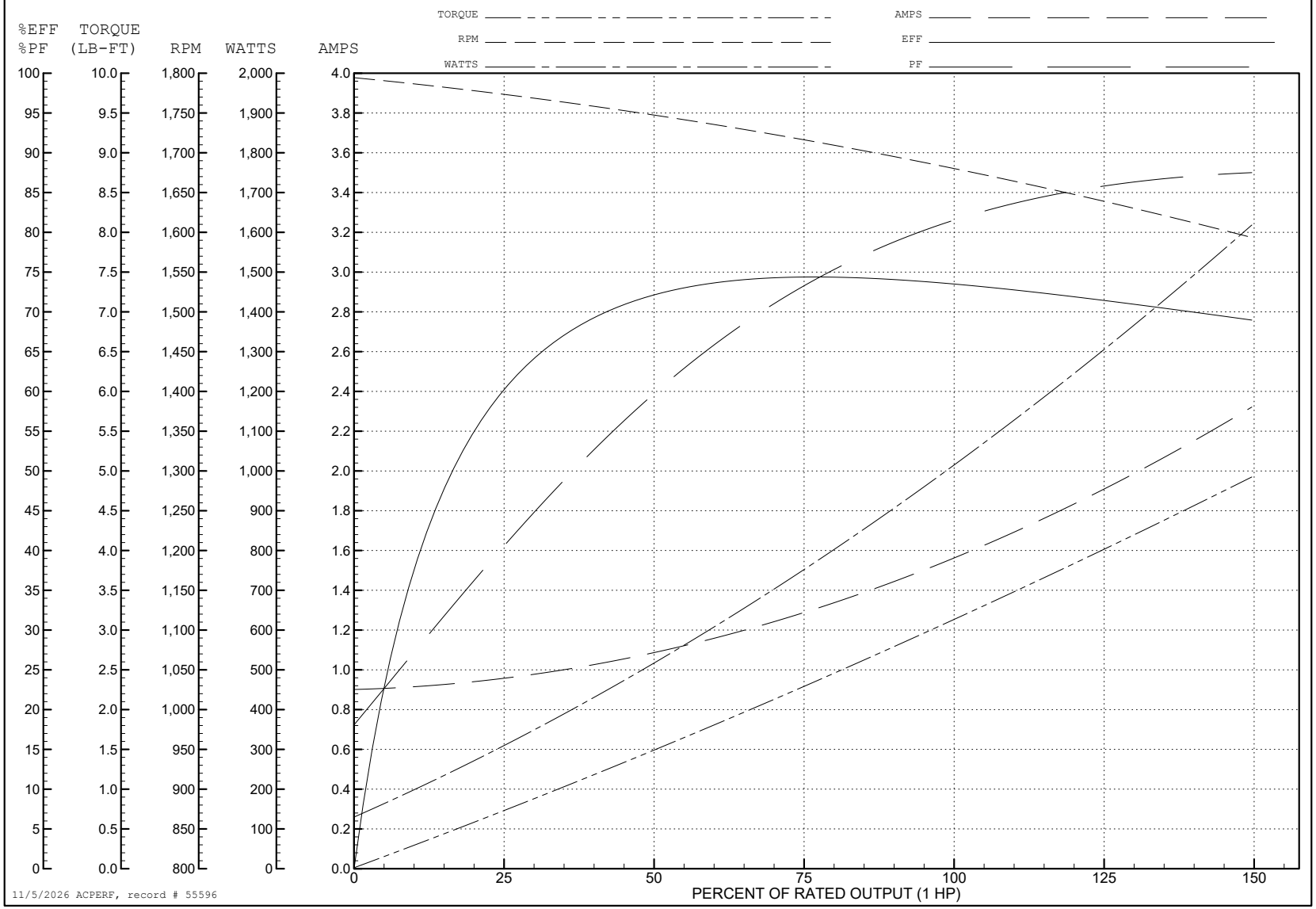

34LYK208

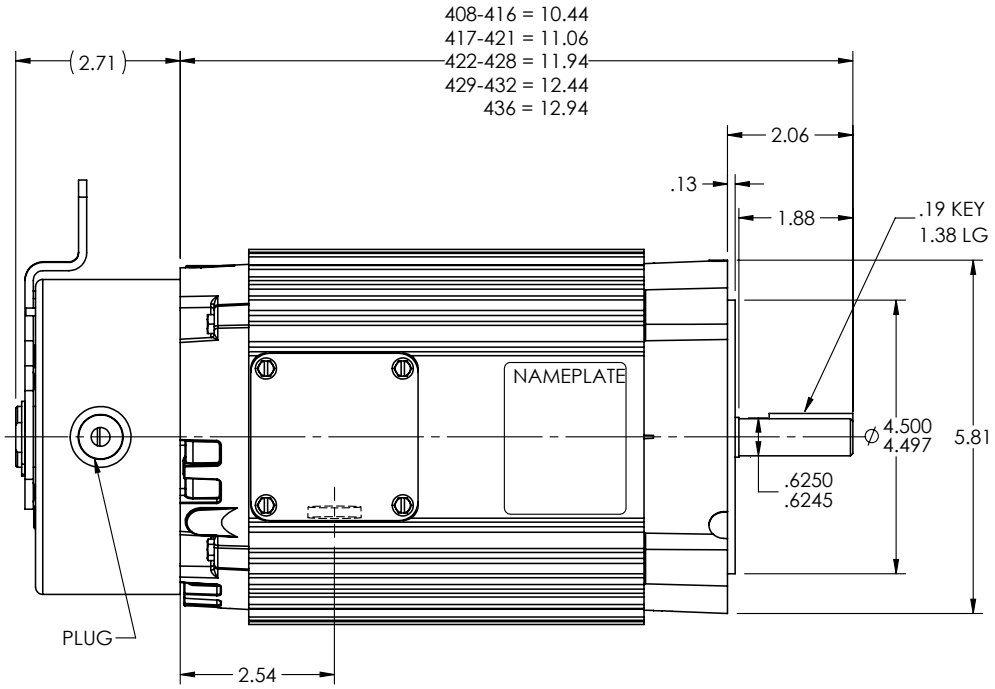

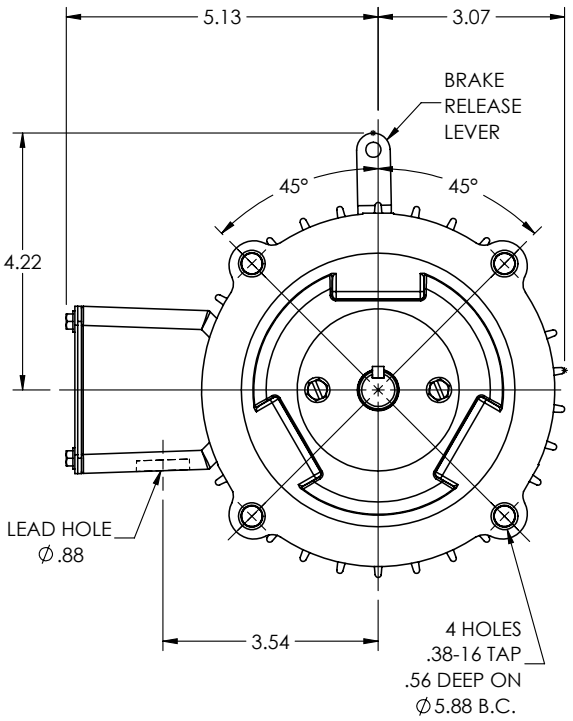

34LYK208

CUSTOMER IS RESPONSIBLE FOR DETERMINING THAT THE PRODUCT WILL PERFORM SUITABLY IN THE INTENDED APPLICATION

REV. DESC: LOAD TO SOLIDWORKS - REV C			
REV: D	VERSION: 04	REVISED: 01:44:25 01/03/2023	TDR: 000001201165
34LYK208	MODEL NO. 34LYK208		REF: -
	BY: ENFRAJ0		

BALDOR - RELIANCE®

VERT 34M NEMA 56C TENV W/EXTRUDED FRAME & 321 BRAKE

CD0005

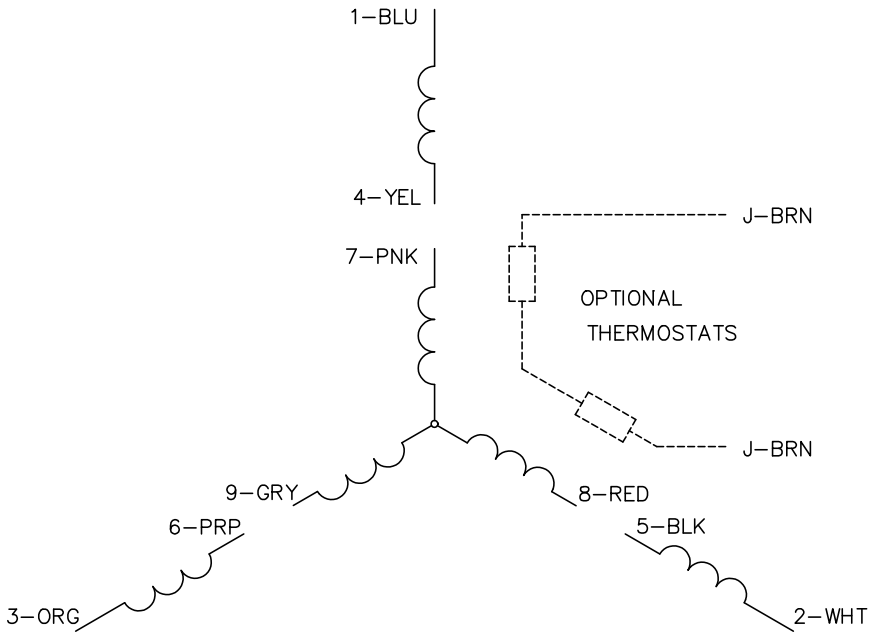

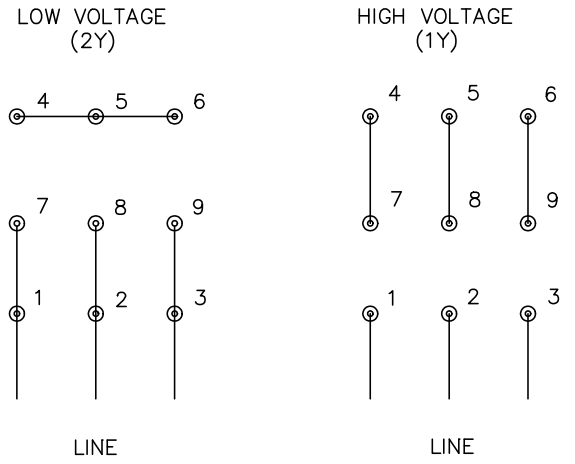

NOTES:

1. INTERCHANGE ANY TWO LINE LEADS TO REVERSE ROTATION.
2. OPTIONAL THERMOSTATS ARE PROVIDED WHEN SPECIFIED.
3. ACTUAL NUMBER OF INTERNAL PARALLEL CIRCUITS MAY BE A MULTIPLE OF THOSE SHOWN ABOVE.
4. LEAD COLORS ARE OPTIONAL. LEADS MUST ALWAYS BE NUMBERED AS SHOWN.

CD0005

REV. DESC: REVISE TO SHOW OPTIONAL COLORS			BALDOR ELECTRIC Co.
REV. LTR: E	BY: JLP	REVISED: 01/19/99 10:15	TDR: 0171435
CD0005		FILE: AAA00005140	MDL: –
		MTL: –	3PH, DV, 9 LEADS