ABB BALDOR RELIANCE

Customer information packet

CWDM3538

.5HP, 1775RPM, 3PH, 60HZ, 56C, 3514M, TENV, F1
Class - None
Division - Not Applicable

Copyright © All product information within this document is subject to ABB Motors and Mechanical Inc. copyright © protection, unless otherwise noted.
11/5/2026 4:26:41 PM

Specifications

Enclosure	TENV
Frame	56C
Frame Material	Steel
Frequency	60.00 Hz
Haz Area Class and Group	None
Haz Area Division	Not Applicable
Motor Letter Type	Three Phase
Output @ Frequency	.500 HP @ 60 HZ
Phase	3
Synchronous Speed @ Frequency	1800 RPM @ 60 HZ
Voltage @ Frequency	230.0 V @ 60 HZ
	460.0 V @ 60 HZ
Agency Approvals	C UR US
Ambient Temperature	40 °C
Auxiliary Box	NO AUXILLARY BOX
Auxiliary Box Lead Termination	None
Base Indicator	Rigid
Bearing Grease Type	Polyrex EM (-20F +300F)
Blower	None
Current @ Voltage	1.010 A @ 460.0 V
	2.020 A @ 230.0 V
Design Code	B
Drip Cover	No Drip Cover
Duty Rating	CONT
Efficiency @ 100% Load	81.5 %
Electrically Isolated Bearing	Not Electrically Isolated
Feedback Device	NO FEEDBACK
Front Shaft Indicator	None
Heater Indicator	No Heater
High Voltage Full Load Amps	1.0 a
Insulation Class	F
Inverter Code	Inverter Duty

Part Detail

Revision	A
Type	AC
Mech. spec.	35S588
Base	
Status	PRD/A
Elec. spec.	35WGG069
Layout	35LYS588
Eff. date	04-26-2024
CD Diagram	CD0005
Poles	04
Leads	9#18
Proprietary	False
Created date	09-15-2023

KVA Code	N
Lifting Lugs	No Lifting Lugs
Locked Bearing Indicator	Locked Bearing
Motor Lead Quantity/Wire Size	9 @ 18 AWG
Motor Lead Termination	Flying Leads
Motor Standards	NEMA
Motor Type	3514M
Mounting Arrangement	F1
Number of Poles	4
Overall Length	11.06 IN
Power Factor	63
Product Family	Wash Down
Pulley End Bearing Type	Sealed Bearing
Pulley Face Code	C-Face
Pulley Shaft Indicator	Standard
Rodent Screen	None
Service Factor	1.25
Shaft Diameter	0.625 IN
Shaft Ground Indicator	No Shaft Grounding
Shaft Rotation	Reversible
Shaft Slinger Indicator	No Slinger
Speed	1775 rpm
Speed Code	Single Speed
Starting Method	Direct on line
Thermal Device - Bearing	None
Thermal Device - Winding	None
Vibration Sensor Indicator	No Vibration Sensor
Winding Thermal 1	None
Winding Thermal 2	None

Nameplate

NP1496L											
CAT.NO.	CWDM3538										
SPEC.	35S588G069G3										
HP	.5										
VOLTS	230/460										
AMP	2.02/1.01										
RPM	1775										
FRAME	56C		**HZ**	60			**PH**	3			
SER.F.	1.25	**CODE**	N	**DES**	B	**CLASS**	F				
NEMA-NOM-EFF	81.5	**PF**	63								
RATING	40C AMB-CONT										
CC											
DE	6205		**ODE**	6203							
ENCL	TENV	**SN**									
	SFA 2.2/1.1										

AC Induction Motor Performance Data
Record # 100503
Typical performance - not guaranteed values

Winding: 35WGG069-R077	**Type:** 3514M	**Enclosure:** TENV

Nameplate Data				**460 V, 60 Hz: High Voltage Connection**	
Rated Output (HP)			.5	**Full Load Torque**	1.48 LB-FT
Volts			230/460	**Start Configuration**	direct on line
Full Load Amps			2.02/1.01	**Breakdown Torque**	8 LB-FT
R.P.M.			1775	**Pull-up Torque**	4.4 LB-FT
Hz	60	**Phase**	3	**Locked-rotor Torque**	5.1 LB-FT
NEMA Design Code	B	**KVA Code**	N	**Starting Current**	8.4 A
Service Factor (S.F.)			1.25	**No-load Current**	0.85 A
NEMA Nom. Eff.	81.5	**Power Factor**	63	**Line-line Res. @ 25ºC**	30.3 Ω
Rating - Duty			40C AMB-CONT	**Temp. Rise @ Rated Load**	44°C
S.F. Amps			2.2/1.1	**Temp. Rise @ S.F. Load**	51°C
				Locked-rotor Power Factor	66.8
				Rotor inertia	0.101 lb-ft²

Load Characteristics 460 V, 60 Hz, 0.5 HP

% of Rated Load	**25**	**50**	**75**	**100**	**125**	**150**	**S.F.**
Power Factor	24	37	48	58	65	71	65
Efficiency	58.9	72.5	78.4	80.5	81.6	81.5	81.6
Speed	1793	1788	1782	1776	1771	1763	1771
Line amperes	0.85	0.89	0.94	1.01	1.11	1.21	1.11

ABB Motors and Mechanical Inc.

WINDING # 35WGG069

0.5 HP 3 PH 60 HZ 1775 RPM 460 V 3514M

Typical performance - not guaranteed values.

TORQUES(LB-FT): PO=8 PU=4.4 LR=5.1 LRA=8.4

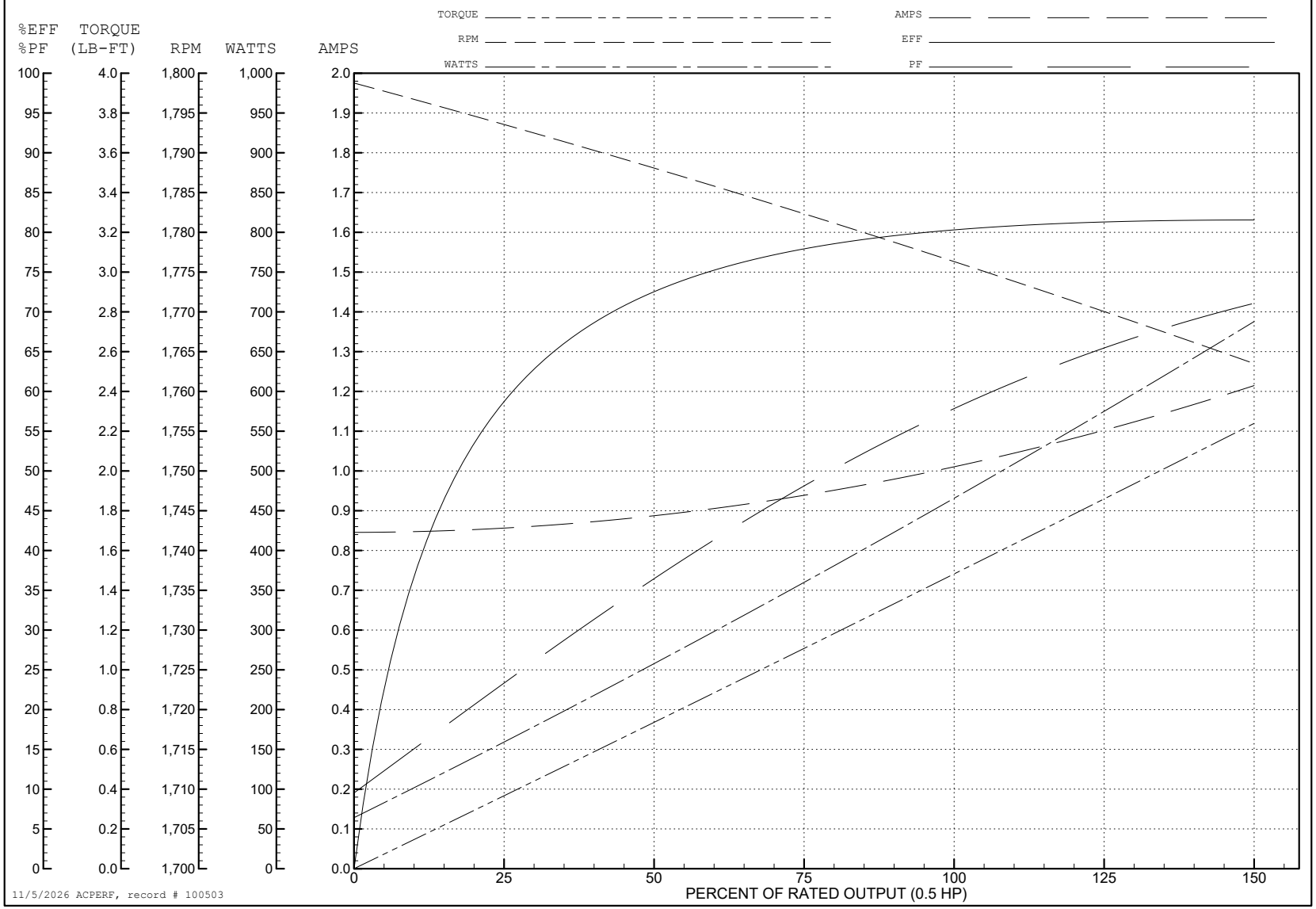

35LYS588

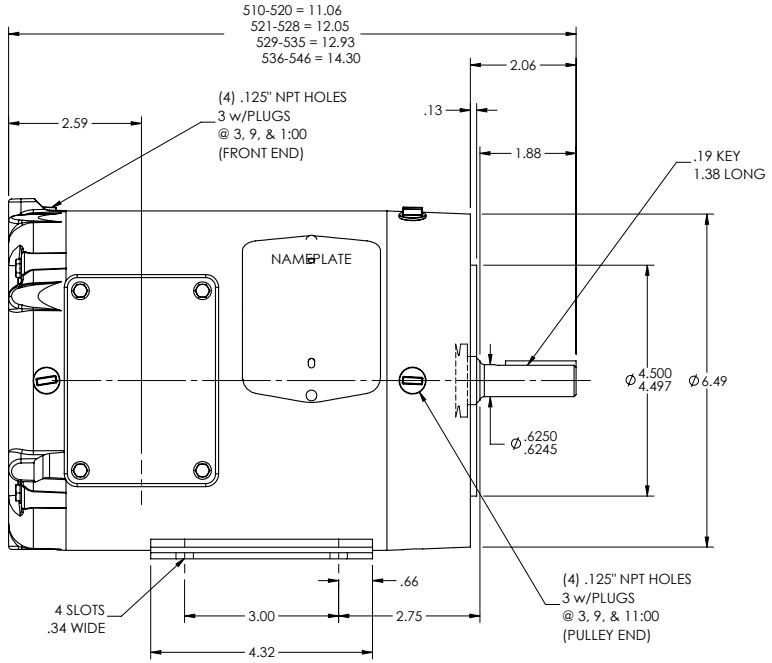

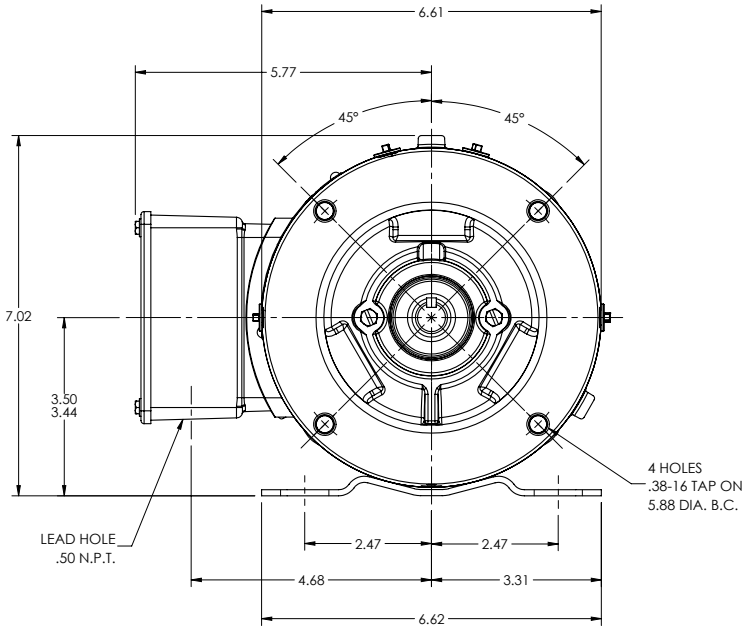

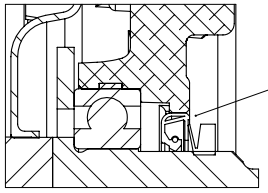

OMIT LOCK-WASHERS & APPLY SEALER UNDER BEARING RETAINER SCREW HEADS & HOUSING O.D. BEFORE PRESSING IN SEAL.

PULLEY END DETAIL

CUSTOMER IS RESPONSIBLE FOR DETERMINING THAT BALDOR'S PRODUCT WILL PERFORM SUITABLY IN THE INTENDED APPLICATION.

REV. DESC: UPDATE 3D MODEL BOM PER REV U, NO CHG TO 2D PRINT			
REV: G	VERSION: 07	REVISED: 03:01:31 03/14/2022	TDR: 000001187335
MODEL NO: 35LYS588			REF: -
BY: USBUFRA	Material: -		B

BALDOR - RELIANCE®

STD HORZ 56C TENV 35M WD (S/P #9)
SH 1 of 1

35LYS588

CD0005

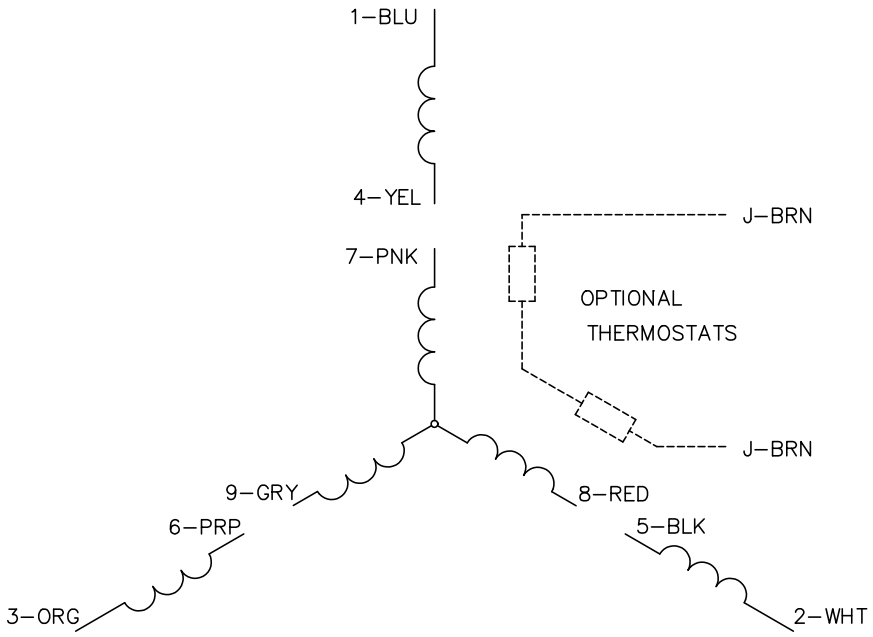

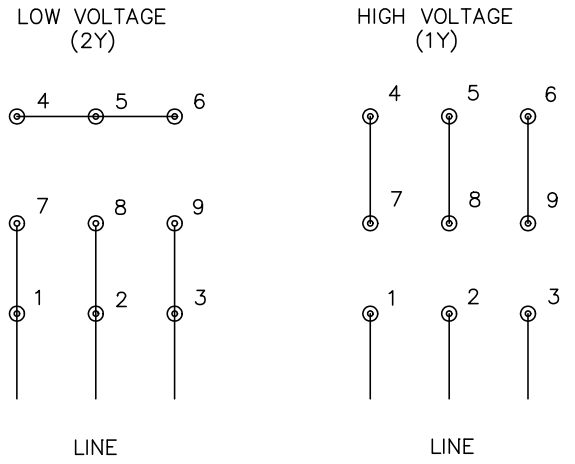

NOTES:

1. INTERCHANGE ANY TWO LINE LEADS TO REVERSE ROTATION.
2. OPTIONAL THERMOSTATS ARE PROVIDED WHEN SPECIFIED.
3. ACTUAL NUMBER OF INTERNAL PARALLEL CIRCUITS MAY BE A MULTIPLE OF THOSE SHOWN ABOVE.
4. LEAD COLORS ARE OPTIONAL. LEADS MUST ALWAYS BE NUMBERED AS SHOWN.

CD0005

REV. DESC: REVISE TO SHOW OPTIONAL COLORS			BALDOR ELECTRIC Co.
REV. LTR: E	BY: JLP	REVISED: 01/19/99 10:15	TDR: 0171435
CD0005		FILE: AAA00005140	MDL: –
		MTL: –	3PH, DV, 9 LEADS