WORLD DRYER

WORLD DRYER

SMARTdri® Plus

Speed That's Smart



For those who want it all in a simple design, SMARTdri Plus is a wise choice. It dries hands in as little as 10 seconds, which blows away comparable models.

It's energy efficient, durable, sanitary, and flexible. Users appreciate the touchless operation, adjustable controls set to their comfort, and quieter sound quality. Contractors find it easier to install with control options suitable for any application. And while it may be compact, you can expect it to withstand high-demand traffic. The antimicrobial technology helps maintain a cleaner environment[1].

Best of all, it's efficient, using 80 percent less energy than conventional hand dryers. Every model is backed by a 10-year warranty for added peace of mind. SMARTdri Plus features a focused high-intensity nozzle.



SMARTdri Plus

Single-port nozzle delivers a focused dry

Fast Dry Time

Dries hands thoroughly in as little as 10 seconds.

Cleaner Environment

Antimicrobial technology protects the treated surfaces on the dryer by inhibiting the growth of bacteria, mold and fungus that can cause stains, odors or deterioration.

Energy Efficient

Uses up to 80% less energy than conventional hand dryers.

Flexible

Adjusts between on/off heating and 3-speed motor controls to optimize sound, comfort, and energy usage.

Extended Life

Lasts up to 3 times longer than the competition with industry-leading motor.

Simple by Design. Smart Technology.

Specifications

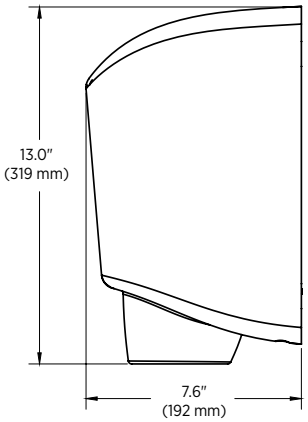

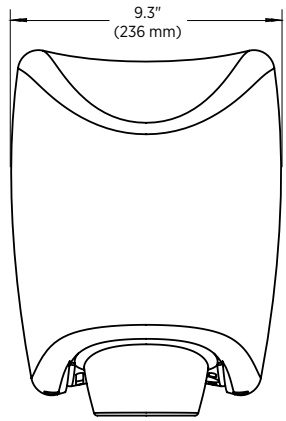



IP24 ADA COMPLIANT 10 yr WARRANTY 7 yrs motor and sensor GREEN PRODUCT CERTIFIED U.S. GREEN BUILDING COUNCIL MEMBER CE c UL us GreenSpec® LISTED www.GreenSpec.com



Polished



Brushed



White



Black

SMARTdri Plus *(single-port nozzle)*

COVER MATERIAL	COVER FINISH / KIT	110-120 V	208 - 240 V (60HZ)	220 - 240 V (50HZ)	UNIT WEIGHT	UNIT SIZE (HXWXD) INCH [MM]	SHIPPING SIZE (HXWXD) INCH [MM]
Aluminum	White	K-974P2	K4-974P2	K48-974P2	13.2 lb / 6 kg	12.5" x 9.3" x 7.6" [319 x 236 x 192 mm]	14.7" x 11.4" x 10.8" [375 x 290 x 275 mm]
	Black	K-162P2	K4-162P2	K48-162P2			
Stainless Steel	Polished	K-972P2	K4-972P2	K48-972P2	14.4 lb / 6.5 kg		
	Brushed	K-973P2	K4-973P2	K48-973P2			
	Recess Kit		KKR-973		9.8 lb / 4.4 kg	25.0"x 15.0"x 4.0" [635 x 381 x 102 mm]	30" x 15" x 7.88" [760 x 380 x 200 mm]

	110-120 V	208- 240 V	220 – 240 V
Amps	3.3 - 10.0	1.8 - 5.2	1.7 -5.0
Watts	400 - 1200	425 - 1250	400 -1200
Hz	60	60	50

Choose a SMARTdri design for your restroom environment. World Dryer puts visionary products within arm's reach.

[1] *Protects the treated surfaces on the dryer by inhibiting the growth of bacteria, mold and fungus that can cause stains, odors or deterioration.*

Form No. 800-012, 8/22 | zurn.com/patents

WORLD DRYER CORP: 1.800.323.0701
WORLDDRYER.COM